SPLIT-FIRE®

Owners Manual

1165V

Thank You for Purchasing a Split-Fire Log Splitter!

We appreciate having you as our customer and wish you many years of safe and satisfactory operation with your machine.

SPLIT-FIRE SALES INC.

135 Main St.
Norwich, ON N0J 1P0
Canada

1-877-548-3473 / 519-468-3647

Please share a google review about your

Split-Fire experience

Table of Contents

1. Introduction 4
   1.1 How to use your Owner's Manual 4
   1.2 Product Identification 6
   1.3 Warranty 8
2. Safety 9
   2.1 Safety Labels 9
   2.2 Wood Handling Safety 13
   2.3 Operation Safety 14
   2.4 Worksite Safety 17
   2.5 Option Safety / Operation 19
      2.51 Log Lifter 19
      2.52 Log Table 22
      2.53 Stroke Limiters 23
      2.56 Knee Control 26
      2.54 Kindling Wedge ..... **Error! Bookmark not defined.**
      2.55 Push Handle with Castor Wheel 27
3. Operation 28
   3.1 Before Operation 28
   3.2 Operation 30
   3.3 After Operation 31
4. Maintenance 32
   4.1 Engine Maintenance 32
   4.2 Log Splitter Maintenance 32
      4.21 Hydraulic system 32
      4.22 Hydraulic Oil Change Instructions 33
      4.23 Frame 35
      4.24 Tires & Hitch 36
5. Storage 37
6. Towing your Log Splitter 38
7. PARTS BREAKDOWN 40
8. Manual Checklist 42

1. Introduction

1.1 How to use your Owner's Manual

This owner's manual is a very important part of your new machine and should remain a permanent part of it. If the machine is sold, the owner's manual must go with it.

By reading the owner's manual you will help yourself and others avoid unnecessary personal injury, damage to the machine, and will also allow you to perform maintenance to keep your machine operating properly. The information recorded in this manual will help you use this machine safely and effectively. Every operator must read and understand this manual before operating this log splitter.

If your machine has been ordered with any options or attachments, please refer to the option safety section of the owner's manual, or the supplementary owner's manual that is included with that specific accessory.

The machine that is used in this manual for illustration may differ slightly from your model. It will be similar enough to help you understand the instructions.

Throughout this manual the terms "Back" and "Front" will be used. On the 1165 vertical log splitter, the "front" refers to the hitch side and the wheels are on the "back". Also, "Left Hand" and "Right Hand" will be used. These sides are determined when standing in front of the machine facing the hitch. The engine is located on the back-right corner of the machine.

Your machine has been tested and inspected to pass quality control at Split-fire's Manufacturing facility to ensure good performance prior to leaving the factory.

While reading the manual, important messages are used to bring the operator's attention where there may be safety concerns relating to machine damage and important servicing information. Please read all these messages to avoid personal injury and machine damage. The three main messages will start with:

WARNING!!!: which suggests, a strong chance of personal injury or death to the operator or bystanders if procedures are ignored.

IMPORTANT: which suggests, a strong chance of potential damage to the machine may occur if procedures are ignored.

NOTE: suggests to the operator, General information given to help the operator to operate or service the machine.

1.2 Product Identification

If you ever need to contact your dealer or the manufacturer for parts or questions regarding the operation or servicing of the machine, it is important to have the model number as well as all the necessary identification numbers. Using the sample pictures on page 7 you can find the necessary numbers to complete the spaces below.

Date of Purchase:

_____

Dealer Name:

_____

Dealer Phone Number:

_____

Frame Serial Number: (XX XX XX)

_____

Engine Serial Number (If equipped with engine): (8-16 Digits)

_____

Engine Serial Number

Frame Serial Number

1.3 Warranty

Split-Fire Sales Inc. guarantees the original purchaser of any new Split-Fire machine, that the same is free of defects in workmanship or materials that may cause performance failure, subject to the conditions hereafter.

Split-Fire must be contacted before the problem on the machine has been fixed. Split-Fire will diagnose the problem and authorize any warranty work if required. If Split-Fire does not authorize or parts are not sent from Split-Fire, warranty will not be applicable.

This guarantee is limited to a period of one year from the date of purchase. Replacement of any defective part is free of charge FOB Split-Fire Sales Inc. If Split-Fire requires the parts to be returned to Split-Fire, Split-Fire will pay for return shipping.

This guarantee does not apply to engines or other parts that are manufactured and guaranteed by the manufacturer thereof, nor does this apply with respect to any part or product that:

1. has original parts removed or otherwise altered without specific authorization beforehand from Split-Fire Sales Inc.
2. has had placed upon or attached to it, any part or product not sold or approved by Split-Fire Sales Inc.
3. has been damaged or is not used in conformity with the applicable instruction for the machine.
4. has not been properly adjusted or maintained by the owner.
5. has been adjusted or altered to increase the performance of the machine.

This guarantee is in lieu of, and excludes all other guarantees and conditions of merchantability and fitness for a purpose. Acceptance of a Split-Fire Sales product constitutes an agreement that Split-Fire Sales shall have no liability for any special or consequential damage.

2. Safety

2.1 Safety Labels

The machine safety labels shown in the section below are very important. They are placed in areas on the machine that draw the attention of the operator to potential safety hazards on the machine. If at any time the stickers are removed, or come off, contact your dealer or the manufacturer immediately for replacement decals.

The owner's manual explains the potential safety hazards in detail associated to each decal. Special attention should be kept for these recommendations. They are outlined for your safety.

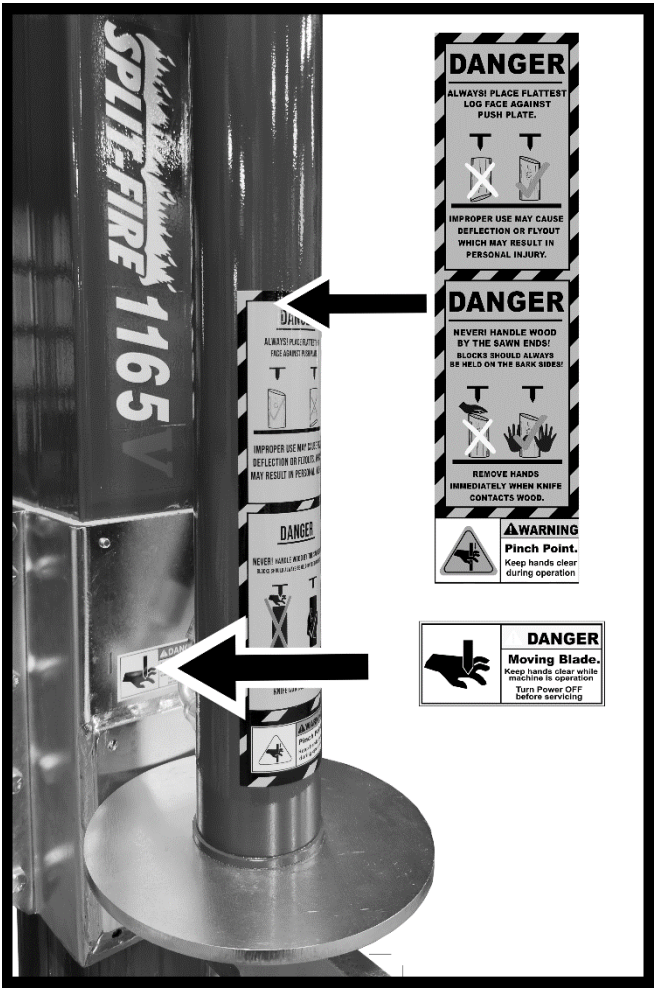

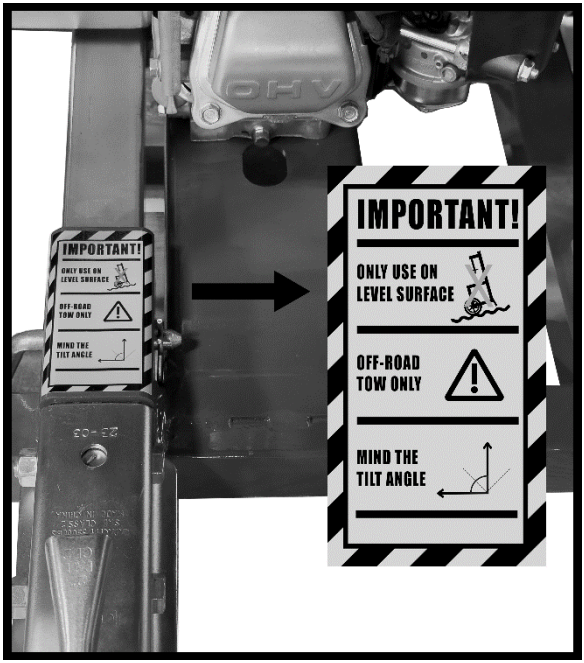
IMPORTANT!
ONLY USE ON LEVEL SURFACE
OFF-ROAD TOW ONLY
MIND THE TILT ANGLE
IMPORTANT!
ONLY USE ON LEVEL SURFACE
OFF-ROAD TOW ONLY
MIND THE TILT ANGLE

WARNING
Pinch Point.
Keep hands clear during operation
WARNING
Pinch Point.
Keep hands clear during operation
WARNING
Pinch Point.
Keep hands clear during operation

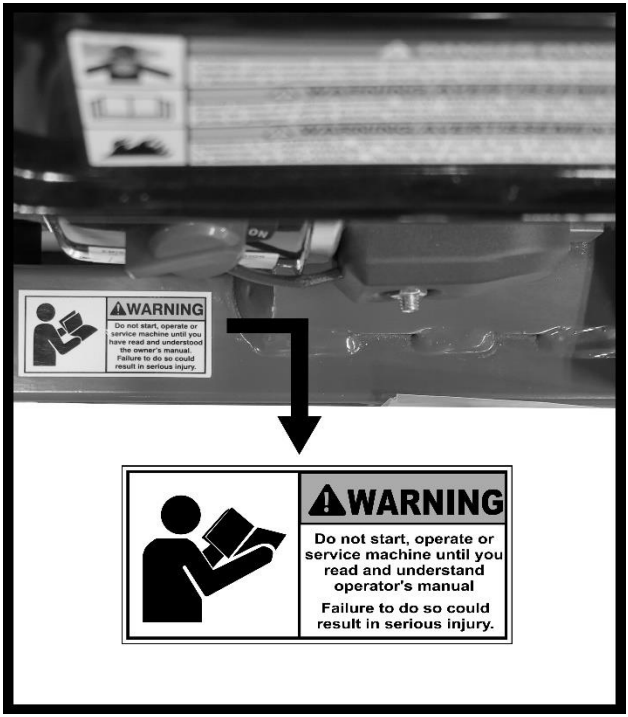
WARNING
Do not start, operate or service machine until you read and understand the owner's manual.
Failure to do so could result in serious injury.
WARNING
Do not start, operate or service machine until you read and understand operator's manual
Failure to do so could result in serious injury.

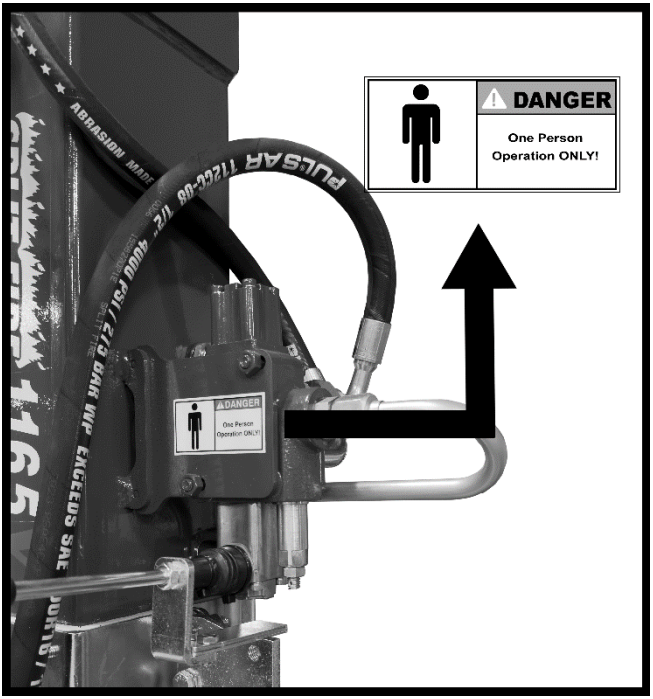
DANGER
One Person Operation ONLY!
DANGER
One Person Operation ONLY!
ABRASION MADE
EXCEEDS SAE
1165

CAUTION
HOT MUFFLER CAN BURN YOU.
Stay away if engine has been running.
WARNING
Gasoline is highly flammable and explosive.
Turn engine off and let cool before refueling.
The engine emits toxic carbon monoxide.
Do not run in an enclosed area.
Read Owner's Manual before operation.
Thai Honda Mfg. Co., Ltd. MADE IN THAILAND

2.2 Wood Handling Safety

WARNING!!! - NEVER HANDLE WOOD ON THE SAWN ENDS; BLOCKS SHOULD ALWAYS BE HELD BY THE BARK SIDES! HANDLING BLOCKS ON THE SAWN END INCREASES RISK FOR PERSONAL INJURY

WARNING!!! - NEVER LIFT HEAVY/OVERSIZE LOGS BY YOURSELF. BAD POSTURE AND HEAVY LOGS MAY CAUSE SEROIUS INJURY. IF THE LOG IS TOO HEAVY GET ASSISTANCE OR UTILIZE A HYDRAULIC LOG LIFTER.

It is important to always wear proper PPE when operating your log splitter.

Gloves – Gloves must be worn at all times to reduce the risk of slivers, imbedded objects (Nails, Wire, etc) and contact with natural poisons, (Poison Ivy, Poison Oak)

Eye Protection – Eye protection must be worn to reduce the risk of eye injury from airborne objects.

Foot Protection – Foot Protection must always be worn to reduce the risk of foot injury from falling logs. When splitting, logs may slip when being lifted, or may fall off the splitting bed.

Hearing Protection – Hearing protection must be worn to reduce the risk of hearing loss. Engines are loud enough to cause risk of hearing loss when exposed over a long period of time.

2.3 Operation Safety

✓ Carefully read and understand all the instructions pertaining to the log splitter in the owner's manual before operating your new machine. Anyone who operates or services this machine must read the owner's manual first. If any doubt or question arises about the safe and/or correct method of performing anything in this manual, contact a representative at our head-office.

✓ Avoid accidents by being alert and recognizing potential hazards. Not all possible circumstances can be anticipated in this manual. Keep your log splitter and work area safe for yourself and others. Proper care and safety is your responsibility.

NOTE: If your log splitter is equipped with a Honda or Loncin engine or any other attachments, be sure to read those manuals.

Warning:

The engine exhaust from this product contains chemicals known to the State of California to cause cancer, birth defects and other reproductive harm.

✓ All operators must have the necessary training and skills to operate the machine properly and safely. Use the controls correctly and follow the safety signs and recommendations.

✘ Never allow untrained persons to operate or service the equipment.

✘ Never let persons under the age of 18 operate the log splitter.

✓ The owner is responsible for accidents and injuries to themselves and/or other persons operating their machine. If others are permitted to use this machine it is the responsibility of the owner to train users.

✓ New users may operate this machine in a clear, unobstructed area under the supervision of an experienced operator, only after they have read and understand the owner's manual.

✓ Only allow responsible adults who are familiar with the instructions to operate this machine.

✓ Inspect your machine each time before use. Special attention should be taken that all guards are in place, damaged or missing parts are replaced, and that all the safety decals highlighted in the safety labels section are in place on the machine.

✓ Each time you operate your log splitter, ensure that the handle on the hydraulic valve springs to the return direction, then to neutral at the top of the stroke. Move handle both ways and if it sticks or does not auto-return immediately, call the dealer or manufacturer for replacement parts.

✓ Only one person may operate the machine at any time. More than one operator greatly increases the chance of personal injury or death.

✘ Never leave machine unattended while running.

✘ Never operate machine when under the influence of alcohol or drugs.

✘ Do not alter; add accessories, or attachments to your log splitter without the approval of the manufacturer. Doing any of the above without the manufacturer's approval WILL VOID THE WARRANTY. If attachments have been added with the approval of the manufacturer, be sure to keep safety labels visible.

✓ Your machine is designed to split wood only! Stones, metal, brush, gravel, and other foreign objects will cause damage to the machine and increase the chance of personal injury or death.

✘ Do not split wood across the grain. Always lay blocks flat cut side down on the table. Cross grain splitting may cause wood to explode or eject sideways and will cause personal injury or death.

✓ Operate your machine in a smooth manner. Do Not jam the control handles back and forth in a uncontrolled motion. Always maintain control and operate the controls at an even steady pace.

2.4 Worksite Safety

✓ Keep area around the log splitter clear from tall grass, debris, tools, and wood chunks/bark at all times.

✓ Operate log splitter on level surface only.

✘ Do not operate your machine in enclosed areas. Your engine produces carbon monoxide, which is extremely dangerous if used in enclosed area. (E.g. garage, workshop, barn)

✘ Do not operate machine when distracted by others. Keep children and pets at least 25 feet away from the work area to protect them from possible injuries. Keep other distractions such as radio, television etc. away.

✓ Only use machine during daylight hours. Use of this machine without proper lighting can lead to personal injury or death.

✓ Protect yourself at all times while operating your machine. Safety glasses, hand protection, steel-toed boots, and ear protection must be worn at all times. Loose clothing is also not permitted around your machine.

✓ Keep hands and body parts clear of the knife and slider at all times.

✘ Never handle wood on the sawn ends; blocks should always be carried by the bark sides.

✘ Hands must not be lower than halfway down the sides of the block when splitting. If hands are lower and a log falls, fingers may get pinched between the log and the table.

✘ Do not transport this machine while the motor is running. This may cause permanent damage to your engine.

✓ Always disconnect the spark plug when the log splitter is not in use or is being serviced.

✓ If your machine is equipped with a log lifter, it is recommended that the operator stands on the left side of the machine and follows the wood up with their hand to stabilize the log.

2.5 Option Safety / Operation

2.51 Log Lifter

The hydraulic log lifter add-on is a great addition when splitting large oversize logs but must be operated with care. If installation is not completed by a Split-Fire technician, follow the installation manual associated with the option.

Log Lifter Safety

- Operate the Log Lifter smoothly. Do NOT move the handles in an abrupt or aggressive manner. (Feather the control handle)
- Do NOT exceed 150lbs load capacity.
- Only operate the log splitter and log lifter on level surfaces
- Ensure that the log lifter is clear of any obstacles, so it does not hit or get caught on tools or machinery.
- Keep people and pets at least 25 feet away from the Log Lifter during operation.

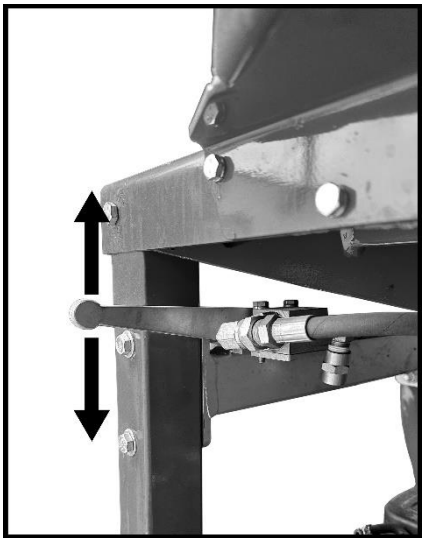

2: Log Lifter Handle

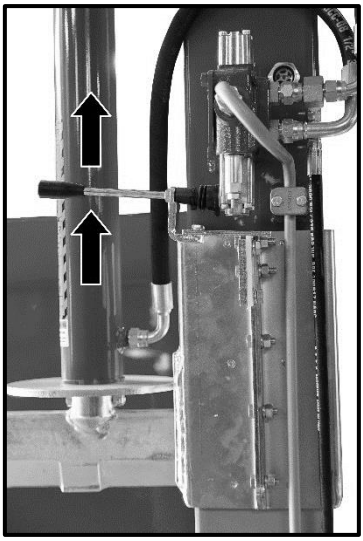

1: Main Splitter Valve

Log Lifter Operation

The log lifter is operated by the log lifter valve in conjunction with the main splitting valve.

To raise the log lifter:

1. Place the log lifter valve handle (1) in the up position.
2. Push upward on the main splitter valve (2), and the log lifter will raise.
3. Keep the log lifter valve in the up position to maintain the log lifter up position.

To lower the log lifter, place the log lifter valve in the down position and the log lifter will lower.

Log Lifter Storage

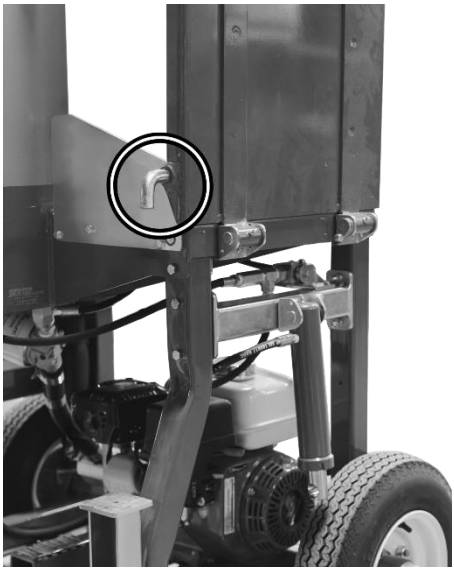

When storing or towing your log splitter the log lifter can be flipped up to keep it out of the way. To do so, remove the lower cylinder pin on the log lifter, flip the log lifter up, and use the cylinder pin to attach it to the storage tab that is attached to the table backer.

IMPORTANT: DO NOT OPERATE THE LOG SPLITTER WITH THE LOG LIFTER CYLINDER DISCONNECTED FROM THE LOG LIFTER.

2.52 Log Table

The log table add-on is a great option that increases efficiency when splitting medium sized logs. If installation is not completed by a Split-Fire technician, follow installation manual associated with the option.

Log Table Safety

- Do NOT exceed 200lbs load capacity.
- Ensure that both spars are positioned properly in their catches before loading table.
- Ensure that the log tables are in the down position before towing the log splitter.
- Ensure that large logs sit evenly on the log table to reduce the risk of falling logs.

2.53 Stroke Limiters

Stroke limiters are a great option if you cut your wood consistently at or below 16 inches. The stroke limiter can be installed or removed at any time depending on the wood length you are splitting.

To install:

1. With the engine ignition switch in the off position, actuate the valve handle to the down position and pull the pull start on the engine until approximately 5-6 inches of cylinder rod are exposed. If your log splitter has an electric motor, turn on the electric motor to move the cylinder.
2. Install the limiting collar on the rod using the 4 included bolts.
3. Remove the plastic slide from the neutral pusher, and bolt the stroke limiter to the pusher using the holes for the plastic.

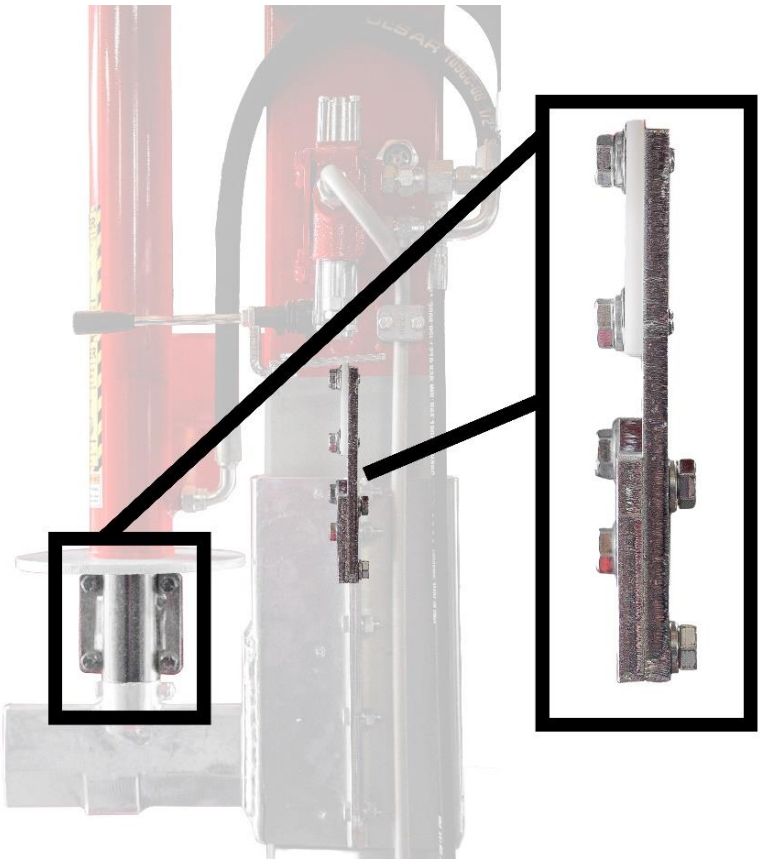

4. There are two holes in the top of the stroke limiter, use these to secure the plastic slide. Ensure the layers of the neutral pusher are stacked as shown below.

5. With the ignition switch still in the off position, pull the pull start until the cylinder does not retract any further. If your log splitter has an electric motor, turn on the electric motor to move the cylinder.

You can now start the engine and begin splitting.

IMPORTANT: Failure to install the limiting collar when using the stroke limiter can cause catastrophic failure. ALWAYS install the limiting collar in conjunction with the stroke limiting bar.

To uninstall:

1. With the ignition switch in the off position, actuate the valve handle to the down position and pull the pull start until 1-2 inches of cylinder rod are exposed. If your log splitter has an electric motor, turn on the electric motor to move the cylinder.

2. Remove the plastic slider from the stroke limiting bar, then remove the stroke limiting bar.

3. Reinstall the plastic slide onto the neutral pusher in the orientation shown above.
4. Remove the limiting collar from the cylinder rod.
5. With the ignition switch in the off position, pull the pull start until the cylinder is fully retracted. If your log splitter has an electric motor, turn on the electric motor to move the cylinder.

You can now start the engine and begin splitting

2.54 Knee Control

The knee control allows the user to operate the log splitter more efficiently by allowing both hands to be free to manipulate the wood. If your knee control was not installed by a Split-Fire technician read and follow the installation instruction manual included with the parts kit. Always preform the knee-control pre-operation checks before operating your log-splitter.

Knee Control Pre-Operation

1. Check that all fasteners, and limit bolts are tight and in place.
2. Cycle the knee control with the engine/motor off, if any of the joints are binding, or you can not fully reach both limiters without excessive force do not operate the log splitter. Repair and/or lubricate before continuing use.
3. With the engine/motor running, fully cycle the log splitter with no wood in the splitting zone. Ensure that the knee control moves smoothly and the splitter cycles as it should. If you notice any binding or stiffness in the knee control do not continue using your log splitter. Repair and/or lubricate before continuing use.

Knee Control Safety

- Always hold your wood on the bark sides, and ensure that thumbs are not placed on top of the wood.
- Never attempt to operate the knee control if it is binding or seized
- Never operate the knee control on uneven, soft, or slippery surfaces, or if debris or tripping hazards are present. Doing so will cause accidental actuation causing severe injury.
- Never operate the knee control if you must lift your foot to reach the paddle. Doing so will cause accidental actuation causing severe injury.

2.55 Push Handle with Castor Wheel

The push handle is an option that can be installed in place of the hitch to allow easier movement of your log splitter on level surfaces. To use just simply pull down on the handle to the stop, and roll the machine where needed. Then carefully let the handle back up and your splitter will lower back on its legs and be ready to split.

Castor wheel installation

1. Remove the draw bar from the splitter.
2. Using the same pin that holds the draw bar in place, install the castor wheel tube in either the short or long position.

Castor Wheel Safety

- NEVER use the castor wheel on uneven or sloped surfaces
- ALWAYS ensure that the castor wheel pin is installed, and the R-Pin is in place
- NEVER use the log splitter to transport other tools

3. Operation

3.1 Before Operation

Before operating your machine, inspect it to ensure it is in good working order.

1. Put on PPE before starting the engine, or working on/with the log splitter. (Ear, Eye, Foot, and Hand protection is important for safety).

2. It is important that you have read and understood all safety recommendations before operating the Log Splitter. Read both the Log Splitter and Engine owners manual before operating the machine.

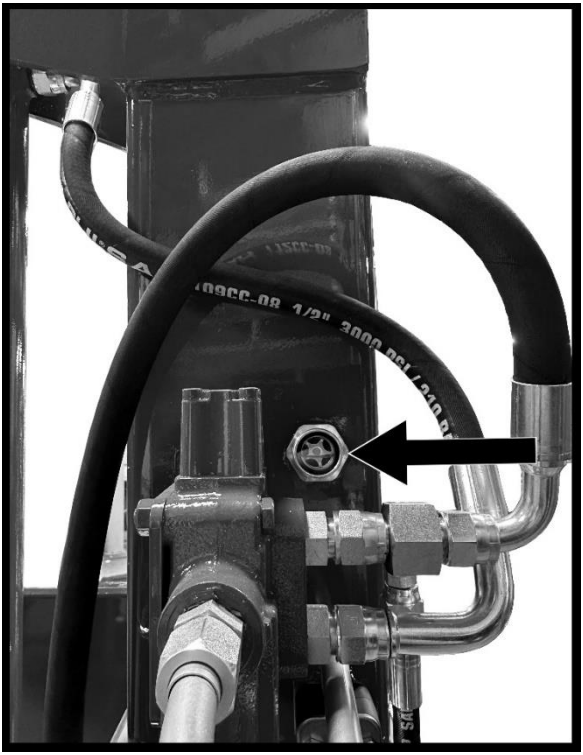

3. Verify the hydraulic oil level is at the correct level in the sight glass. The oil level must be sitting in the top half of the sight glass when the cylinder is fully retracted, the log splitter is on level ground, and the hydraulic oil is cold.

4. Verify the engine oil level is at the correct level on the oil dip stick. The oil level must be sitting between the indication grooves.

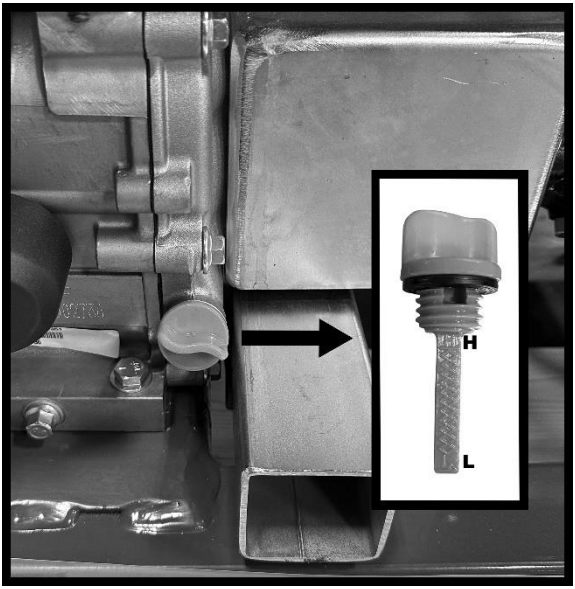

5. Ensure that both tires are filled to the proper level with air. This can be visually confirmed or double checked with an air pressure gauge. Tire pressure = 25 PSI
6. Be sure that the knife is free of burrs and dents. This can occur from splitting logs with embedded steel material. If the knife has burrs or is dented, sand the knife gently to remove the dent and the burrs.
7. Check for any hydraulic leaks around the hydraulic valve, cylinder, filter, and pump. If there are any leaks replace the faulty parts and reseal leaky fittings.
8. Verify that the log splitter is on level ground and the work area is clean and organized.
9. Once the “before operation inspection” has been completed, the Log Splitter is ready for operation.

3.2 Operation

Once the “before operation checklist” has been completed, operation can begin:

1. Put on PPE before starting the engine, or working on/with the log splitter. (Ear, Eye, Foot, and Hand protection is important for safety).

2. The engine can be started. It is important to verify that the ON/OFF switch is in the ON position, the fuel is turned ON, as well as placing the choke in the ON position. (If the motor is warm the choke may not be needed.) Refer to the owner’s manual associated with the engine for specifics.

   NOTE: If your cylinder has extended during storage, this is normal. With the ignition in the off position pull the recoil to retract the cylinder then start the engine as normal. This can be avoided by using a prop-rod to hold the cylinder retracted in storage.

3. Once the engine has been started, allow the engine to warm up for 2-5 minutes. Not only does this warm up the engine, it also warms up the hydraulic oil as it cycles the hydraulic system.

4. After the Log Splitter has warmed up, and PPE has been put on, the engine can be revved to half or full throttle. The machine does not need to operate at full throttle. Noise and fuel reduction can be achieved by lowering engine RPM’s while only slightly lowering productivity.

Once splitting has been completed, follow the following steps:

1. Allow the knife to return to the fully retracted position.
2. The engine RPM can be lowered to an idle. Allow motor to idle for 15-30 seconds before turning off.
3. Turn off engine by switching ON/OFF switch to the OFF position.

3.3 After Operation

After splitting, steps can be completed to keep your machine in good operating status.

1. Once the Log Splitter has cooled off, the machine needs to be cleaned. Its important to clean the frame and remove wood debris. This can be most effectively done with air pressure via a blower, or a water pressure washer. A garden hose will also clean the frame. (Do NOT grease or oil slide pads after cleaning)
2. Give the log splitter a quick visual inspection. Check for loose fasteners, oil leaks, etc., and repair where needed.

If any unusual noise occurs, stop operation immediately and check for damage. If damage has occurred, or the issue persists after initial inspection, contact a dealer immediately to book an inspection. If there are no dealers in your area, contact Split-Fire Sales Inc.

4. Maintenance

Maintaining your machine is important and will ensure that the machine offers years of smooth and reliable operation.

4.1 Engine Maintenance

Read the engine specific owners manual associated with your log splitter. General engine maintenance includes, but is not limited to the following;

1. Oil Changes
2. Air Filter Changes
3. Spark Plug Changes
4. Cleaning of Fuel System

When refueling your engine, it is important to refuel with high test fuel (Preferably 91-94 octane, NOT E85). Small engines will start easier, operate smoother, and will last longer with high test fuel. Any fuel not being used longer than 4 weeks is recommended to have fuel conditioner added for stability.

4.2 Log Splitter Maintenance

4.21 Hydraulic system

Oil Type	AW32 Hydraulic Oil (Anti-Foam if available)
Oil Capacity	Dry System - 17 L (4.5 gal) During Oil Change (Cylinder Full) – 15.5 L (4.1 gal)
Oil Change Frequency	First 50 hours from new production 150 hour regular intervals
Oil Filter Type	SF-6520 Spin-On Hydraulic Oil Filter (10 micron min.) Change oil filter every oil change

4.22 Hydraulic Oil Change Instructions

1. Fully cycle the knife to the top of the stroke. If you have a 16” stroke limiter remove it during the oil change.
2. To ensure you have all of the pressure out of the tank, remove the one of the two plugs on the top of the frame, then remove the drain plug located on the bottom of the frame using a 9/16” allen key. Make sure to have a drain pan ready before removing the drain plug to collect and dispose of the oil properly. If you do not have a 9/16” Allen key, you can use a 3/8” bolt with two nuts tightened together as shown below as a tool to remove the drain plug.

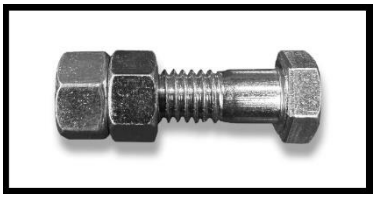

3. If changing the filter, wait until all of the oil has drained from the tank, then remove the filter over a drain pan. Make sure to allow all of the oil drain from the system. Apply a small amount of oil to the filter O-ring and install the new filter. Spin the filter on until it contacts the filter base, then tighten 3/4 to 1 turn
4. Once fully drained, re-tape the drain plug fitting with 3 turns of teflon tape, and replace the drain plug.

5. Fill the reservoir so that the oil is 1/2 way into the sight-glass. This may not be the full volume specified on the previous page, that amount is just an approximation to help know the amount to purchase.

6. Start the log splitter, check and top up the oil in the reservoir. Cycle the cylinder through its travel, then check and top up the reservoir again. Once this has been completed tape and re-insert the two fill plugs. Your 1165V is now ready to split.

4.23 Frame

It is important to maintain your frame for smooth operation. Clean your machine, including the frame and slider assembly. Debris may build up and cause damage if neglected. It is best to clean frame with high pressure air or a pressure washing system.

Do NOT grease or oil the slide assembly. The UHMW slide pads are designed to operate without the addition of oil or grease. Oil and grease will attract dirt and debris particles and will drastically lower the life span of the slide pad.

Slide pad wear will occur over time and can be checked by measuring the movement on the top of the knife. The play can be measured by completing the following steps.

1. Move the knife to the middle of the stoke. Equal distance between the cylinder guard and table.
2. Utilize a rubber mallet hammer to hit the knife to the farthest left.
3. Use a flat edge (Ruler, Level, etc.) against the side of the frame in a horizontal position to use as a measuring point.
4. Measure the distance between the flat edge and the top of the knife.
5. Utilize a rubber mallet hammer to hit the knife to the farthest right.
6. Place the flat edge in the same position and remeasure the distance between the flat edge and the knife.
7. If 1/2” of play is observed, the slide pads need replacement.

Contact your local dealer or Split-Fire Sales Inc. for slide pad kit pricing and availability.

4.24 Tires & Hitch

The tires and Hitch must be inspected periodically for safety and reliability. This in-depth inspection must occur every 150 hours during hydraulic system maintenance.

NOTE: The 1165V is intended for yard tow only. Never tow your log splitter on a public road or at speeds above 15 km/h

Tires – must be inflated properly to 25 PSI of air pressure. If the tires are over inflated, dangerous bouncing may occur when towing.

Wheel bearing and tire straightness must also be inspected. Raise the axle and place on a block/raised surface. Verify that the wheel spins with ease and the rim runs straight and true. If any play in the wheel is observed, the grease cap must be removed, and wheel nut be retightened to remove all play. If any broken or worn-out parts are found, all parts can be found in the parts breakdown or by calling your local dealer or Split-Fire Sales Inc.

Hitch – must be inspected for tightness to ensure towing safety. This can be completed by attaching the hitch to a vehicle. Verify that the ball on the vehicle is a 2” compatible ball. Place the hitch on the ball and latch the hitch. Then check the hitch by lifting and moving the machine to check the hitch for play. The hitch should fit snugly, and no play should be observed. If hitch play is observed, the hitch nut must be tightened. Reference “Towing your Log Splitter” for more details.

5. Storage

When storing your log splitter special attention should be drawn to the areas listed below.

1-4 weeks storage

1. Clean your machine as listed in the “after operation” section.
2. Turn OFF the fuel control on the engine
3. Add fuel stabilizer to maintain fuel quality
4. Store Log Splitter in a dry, clean, and secure area.

   It is not uncommon for Split-Fire Log Splitters to be stolen due to their value. Always store the machine in a secure area!!

5 + weeks storage

1. Clean your machine as listed in the “after operation” section.
2. Place the knife at its highest position. This places the chrome cylinder rod in the cylinder away from potential debris and damage over long periods of time. A prop-rod may need to be used if the cylinder extends due to gravity in storage.
3. Add fuel stabilizer to maintain fuel quality and run engine for 5 minutes to fill carburetor with stabilized fuel.
4. Turn OFF the fuel control on the engine
5. Spray a light oil mist on paint-less areas such as the knife, splitting bed, and outside of the frame. This will prevent surface rust. (This oil must be washed off with a biodegradable solvent when the machine in placed back into service)
6. Store Log Splitter in a dry, clean, and secure area. If the machine is stored outside, tightly wrap the machine in a tarp to reduce moisture, and UV ray exposure.

   It is not uncommon for Split-Fire Log Splitters to be stolen due to their value. Always store the machine in a secure area!!

6. Towing your Log Splitter

The 1165V has been designed to be towed only on private properties at low speeds. Never tow your log splitter on a public road, or at speeds above 15 km/h. Transportation of your log splitter on a public road must be done in a trailer or in the box of a pickup truck.

Take extra care when hooking up and towing your log splitter. Before towing, make sure your log splitter is in safe towing condition. Inspect the tires, bearings, and hitch. Make sure the hitch is attached securely and locked via a locking pin when attaching the log splitter to a vehicle.

The hitch coupler and hitch ball must fit snug when locked. Attach your log splitter to your vehicle with the hitch.

Towing a log splitter puts additional weight on your vehicle. Increase the space around your vehicle to drive and stop safely. When towing your log splitter, avoid potholes, curbs and all other obstacles. Large sudden bumps may result in an overturned log splitter.

Do NOT exceed 15 km/h under any circumstance.

Posi-Lock Hitch Couple

Adjust coupler locking pressure on ball before use. Place handle in locked position with ball in coupler. Tighten locknut against tension spring so that coupler is not loose on ball. Correct adjustment will allow handle to be released with moderate pressure applied to handle. To open, pull up on coupler handle and rotate forward. To close, place coupler on ball. When ball is completely engaged in the ball socket, rotate coupler handle backward until handle is in locked position. Always check tightness before towing. Be sure coupler handle is in locked position.

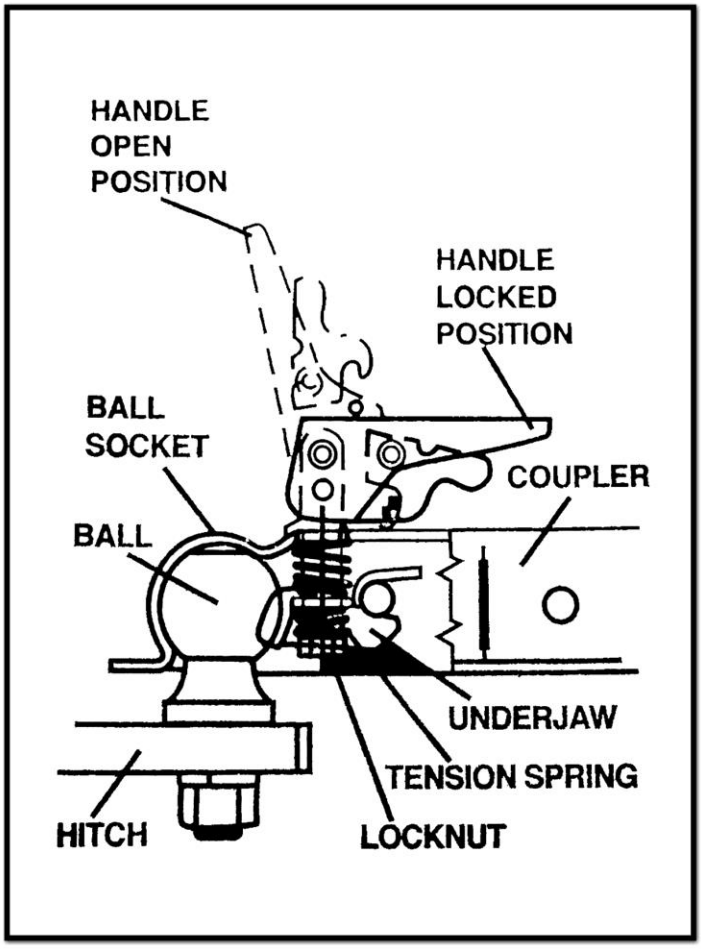

7. PARTS BREAKDOWN

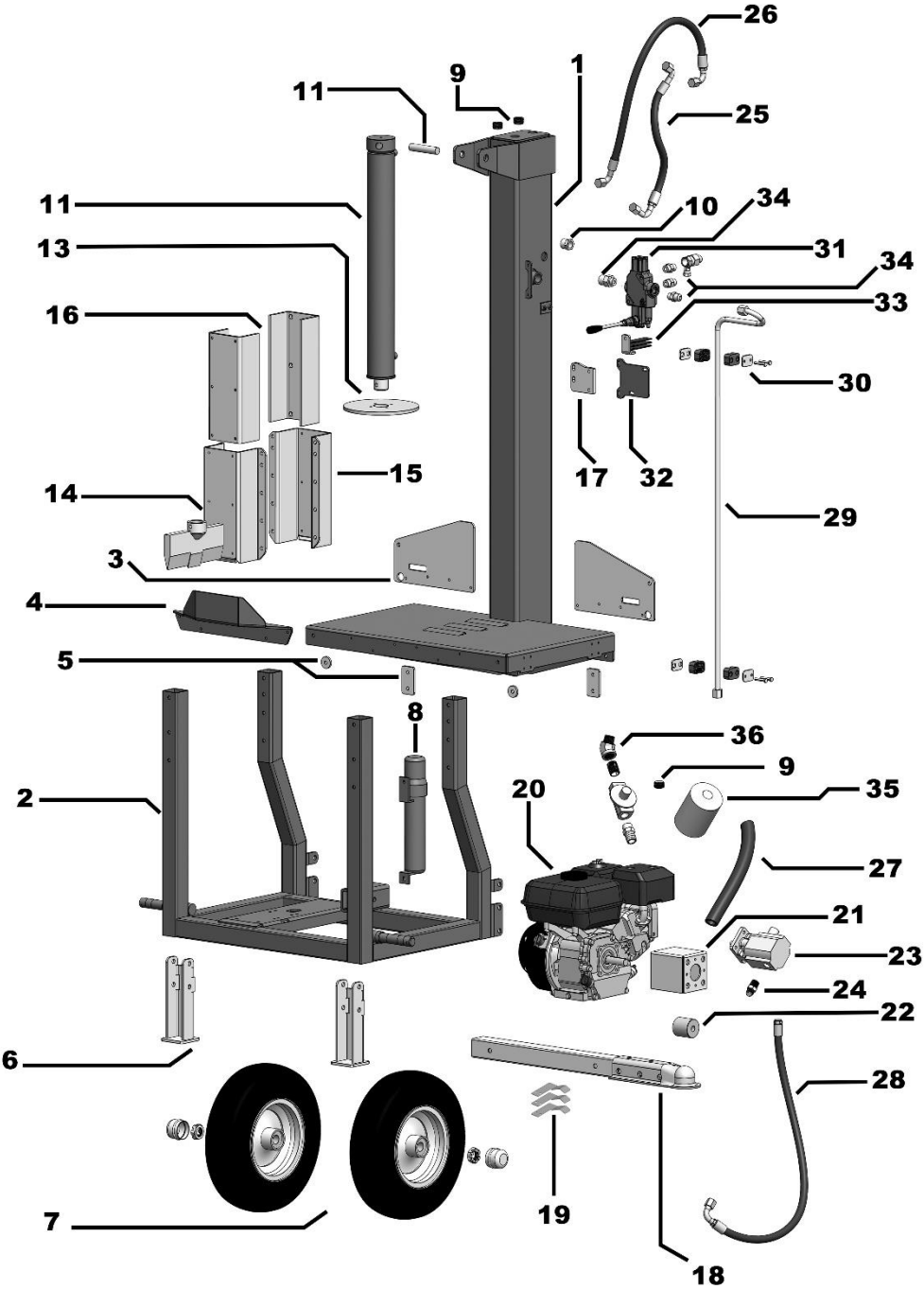

Item	part #	description
1	2311020938	1165V Upper Frame
2	2312071132	1165V Lower Frame
3	2311021722	Table Backer
4	2402151227	Fly-Out Guard
5	2311060928	Lower Frame Washers
6	2404011421	Fold-Up Legs
7	2401080858	Low-Speed Tire (Inc. Nuts and Hubcaps)
8	SLP-PMC-U	Manual Cannister
9	2311060947	Drain/Fill Plugs (Set of 3)
10	2311021723	Sight Glass
11	2311021222	Hydraulic Cylinder Assembly
12	2311140859	Cylinder Pin
13	2311141341	Cylinder Guard
14	2311021151	Slider Shell w/ Knife
15	2311021152	Slider Shell NO KNIFE
16	2401101529	Slide Pad (Pair)
17	2403121028	Stroke Stop Tab
18	2401091054	Hitch Assembly
19	2403131226	Hitch Storage Position Springs (Set of 3)
20.1	SLP-MLG65-SC	Loncin 6.5HP Engine
20.2	SLP-MHG65-SC	Honda GX200 Engine
20.3	SLP-TTE15-SC	Tech Top 1.5hp Electric Motor
21	SLP-CH-SC2	2265-Style Pump Coupler Bracket
22	SLP-MPC-SC23	Love-Joy Coupler
23.1	SLP-P11G-SC23	Hydraulic Pump for Gasoline Engine
23.2	SLP-P7G-SCE	Hydraulic Pump for Electric Motor
24	SLP-F1212NJ	Hydraulic Pump Fitting (1/2" NPT to 1/2" JIC)
25	2311090933	1165V High Pressure Extend Line (Short)
26	2403280828	1165V High Pressure Retract Line (Long)
27	SLP-SH01-SC34	Low Pressure Suction Hose
28	2403280829	1165V High Pressure Pump-to-Valve Hose
29	2311071058	1165V High Pressure Pump-to-Valve Line
30	2311070841	Hydraulic Line Mount w/ Spacer
31	2311020823	Youli MB-2 Motor Spool Valve w/ Modification
32	2311081353	Valve Plate
33	2402261510	Stroke Stop Lever
34	2303271730	Hydraulic Valve Fittings
35	SLP-FE-SC23	Hydraulic Filter
36	2311020924	Hydraulic Filter Base W/ Fittings

8. Manual Checklist

1. Each person that operates this Split-Fire log splitter must read and understand this checklist and the rest of the owner's manual before operation.

2. Handle wood on the bark side only. Never pick up or handle logs by the sawn ends. Handling logs by the sawn ends may result in injury and/or death.

3. Keep hands at least 6 inches away from the knife and slider at all times.

4. Always wear ear, eye, hand, and foot protection when operating the log splitter. Never wear loose clothing.

5. Do not tamper with engine RPM or pressure settings as the oil may overheat and cause leakage. This may result in reduced splitting power and could cause damage to the log splitter.

6. Keep the working area around the log splitter organized and free of equipment, tools, wood, and debris. Not doing so could result in injury or death.

7. Do not lift logs that are beyond your lifting capability.

8. Before towing the log splitter, make sure the hitch is securely fastened. Do not tow the 1165V on public roads. Do not exceed 15 km/h. Do not tow with the engine running and close the fuel shutoff lever on the engine prior to towing.

9. Take frequent breaks when using the log splitter. Stress and fatigue can result in injury and/or death. Be awake and alert at all times.

I have read and fully understand all of the above.
Customer/Operator Signature: _____
Date: _____ / _____ / 20_____