SPLIT-FIRE®

Owners Manual
4090
Gas Powered Wood Chipper

Thank You for Purchasing a Split-fire 4090 Woodchipper!

We appreciate having you as our customer and wish you many years of safe and satisfactory operation with your machine.

SPLIT-FIRE SALES INC.

285633 Airport Road
Norwich, ON N0J 1P0
Canada

1-877-548-3473 / 519-468-3647

Please share a google review about your Split-Fire experience

Table of Contents

1. Introduction 6

1.1 How to use your Owner's Manual.....6

1.2 Product Identification.....8

.....9

1.3 Warranty 10

2. Safety 11

2.1 Safety Labels..... 11

2.2 Wood Handling Safety..... 17

2.3 Operation Safety 18

2.4 Worksite Safety 20

2.5 Option Safety / Operation 21

2.51 Engine Guard..... 21

2.52 Heavy Duty Tire / 4 Bolt Hub 22

2.53 Lights and Fenders 23

2.54 Rear Hitch..... 24

2.55 Caster Wheel..... 25

3. Chipping Capacity 26

4. Operation..... 27

4.1 Before Operation..... 27

4.2 Operation 29

4.21 Heavy Duty Clutch (Overheat Protection) Operation 30

4.3 After Operation 32

4.4 Operation Troubleshooting..... 33

5. Maintenance..... 36

5.1 Engine Maintenance..... 36

5.2 Woodchipper Maintenance 36

5.21 Blades / Rotor Maintenance 36
5.22 Rotor Maintenance 37
5.23 Anvil Maintenance 37
5.24 Bearings Maintenance 38
5.25 Clutch Maintenance 38
5.26 Belt Maintenance 39
5.27 Heavy Duty Clutch Belt Tension and Maintenance 41
5.28 Wheel Maintenance 42
5.29 Latch Maintenance 42
5.30 Torque Spec Chart 43
6. Storing Your Woodchipper 44
7. Towing your Woodchipper 45
8. Checklists 48
8.1 Pre-Start Checklist 48
8.2 Safe Feeding Checklist 49
8.3 Machine Operator Safety Instructions 50
9. Parts Breakdown 52

1. Introduction

1.1 How to use your Owner's Manual

This owner's manual is a very important part of your new machine and should remain a permanent part of it. If the machine is sold, the operator's manual must go with it.

By reading the operator's manual you will help yourself and others avoid unnecessary personal injury and/or damage to the machine and will also allow you to perform maintenance to keep your machine operating properly. The information recorded in this manual will help you use this machine safely and effectively. Once you know how to operate the machine correctly and safely, you can train others to operate the machine as well.

If your machine has been ordered with any options or attachments, please refer to the option safety section of the individual operator's manual that is included with that specific accessory.

The machine that is used in this manual for illustration may differ slightly from your model. It will be similar enough to help you understand our instructions.

Throughout this manual the terms "Left Hand" and "Right Hand" will be used. These sides are determined when standing in front of the engine by the hitch. The "Throttle Control" side of the engine is the right side. Also "Back" and "Front" will be used. On the 4090 woodchipper the "Back" is referred to the chip discharge side. So the discharge chute would be located on the back left of the 4090 woodchipper.

Your machine has been tested and inspected to pass quality control at Split-fire's Manufacturing facility to ensure good performance prior to leaving the factory.

While reading the manual, important messages are used to bring the operator's attention where there may be safety concerns relating to machine damage and important servicing information. Please read all these messages to avoid personal injury and machine damage. The three main messages will start with:

WARNING!!!: which suggests, a strong chance of personal injury or death to the operator or bystanders if procedures are ignored.

IMPORTANT: which suggests, a strong chance of potential damage to the machine may occur if procedures are ignored.

NOTE: suggests to the operator, General information given to help the operator to operate or service the machine.

1.2 Product Identification

If you ever need to contact your dealer or the manufacturer for parts or questions regarding the operation or servicing of the machine, it is important to have the model number as well as all the necessary identification numbers. Using the sample pictures on page 7 you can find the necessary numbers to complete the spaces below.

Date of Purchase:

_____

Dealer Name:

_____

Dealer Phone Number:

_____

Frame Serial Number: (XX XX XX)

_____

Engine Serial Number (If equipped with engine): (XXXXXXX)

_____

Engine Serial Number

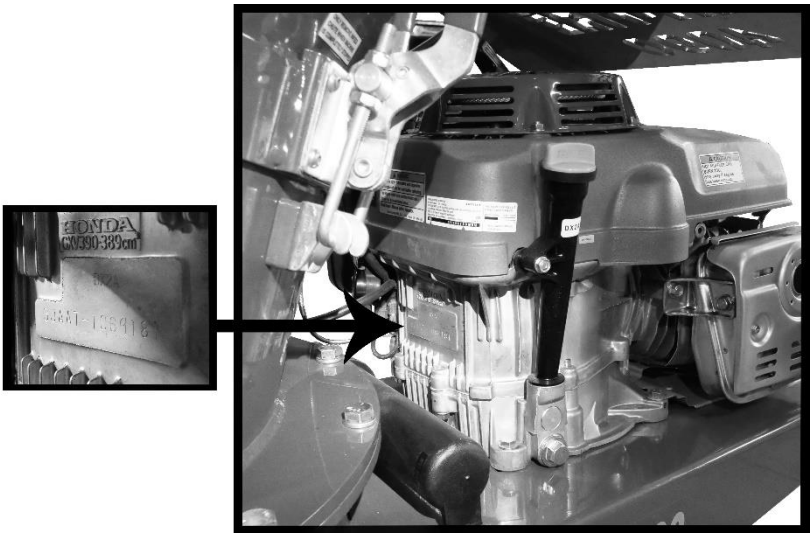

Frame Serial Number

1.3 Warranty

Split-Fire Sales Inc. guarantees the original purchaser of any new Split-Fire machine, that the same is free of defects in workmanship or materials that may cause performance failure, subject to the condition's hereafter.

Split-fire must be contacted before the problem on the machine has been fixed. Split-fire will diagnose the problem and authorize any warranty work that will be allowed. If Split-fire does not authorize or parts are not sent from Split-Fire, warranty will not be applicable.

This guarantee is limited to a period of one year from the date of purchase. Replacement of any defective part is free of charge FOB Split-Fire Sales Inc. If Split-Fire requires the parts to be returned to Split-Fire, Split-Fire will pay for return shipping.

This guarantee does not apply to engines or other parts that are manufactured and guaranteed by the manufacturer thereof, nor does this apply with respect to any part or product that:

1. has original parts removed or otherwise altered without specific authorization beforehand from Split-Fire Sales Inc.
2. has had placed upon or attached to it, any part or product not sold or approved by Split-Fire Sales Inc.
3. has been damaged or is not used in conformity with the applicable instruction for the machine.
4. has not been properly adjusted or maintained by the owner.
5. has been adjusted or altered to increase the performance of the machine.

This guarantee is in lieu of, and excluded all other guarantees and conditions of merchantability and fitness for a purpose. Acceptance of a Split-Fire Sales product constitutes an agreement that Split-fire Sales shall have no liability for any special or consequential damage.

2. Safety

2.1 Safety Labels

The machine safety labels shown in the section below are very important. They are placed in areas on the machine that draw the attention of the operator to potential safety hazards on the machine. If at any time the stickers are removed, or come off, contact your dealer or the manufacturer immediately for replacement decals.

The operator's manual explains the potential safety hazards in detail associated to each decal. Special attention should be kept for these recommendations. They are outlined for your safety.

The Emergency Stop switch is a safety switch that is an easy access switch to turn off the woodchipper in case of an emergency. The emergency switch is situated just above the engine for easy access. The engine will shut off when pushed and can be reset to the run position by twisting and pulling lightly.

This sticker is located in the infeed chute. Do not remove or modify safety guards on this machine or serious injury or death may occur. Safety guards have been put in place for safe operation and must not be removed at any time during operation.

This sticker is located in the infeed chute. Do not put hands, arms, feet, legs or any body part in the infeed chute. If material needs to be pushed down to engage the chipping blades use a forked push stick. This will allow you to push the material into the blades without risk of injury or harm.

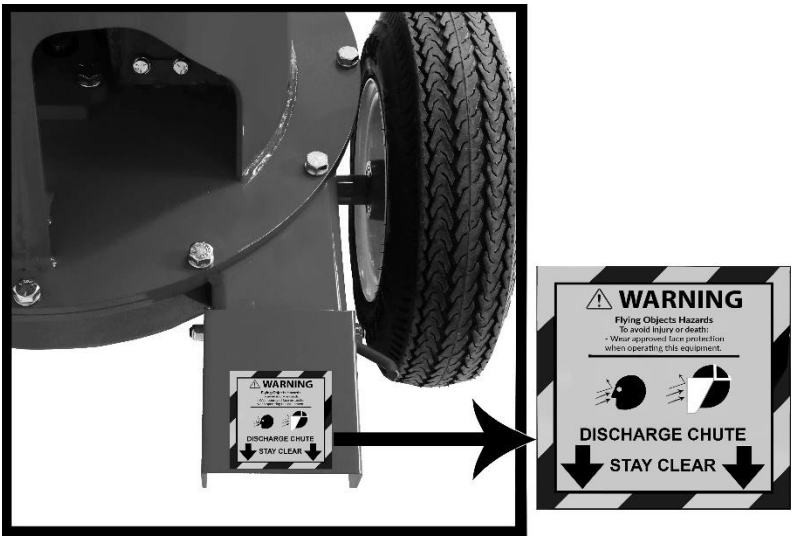

This sticker is located on the chip deflector on the back of the machine. When chipping wood, chips will be discharged out of the discharge chute at high rate of speed. Angle the discharge chute toward the ground to control the chips, and do not walk through the stream of chips while operating the machine.

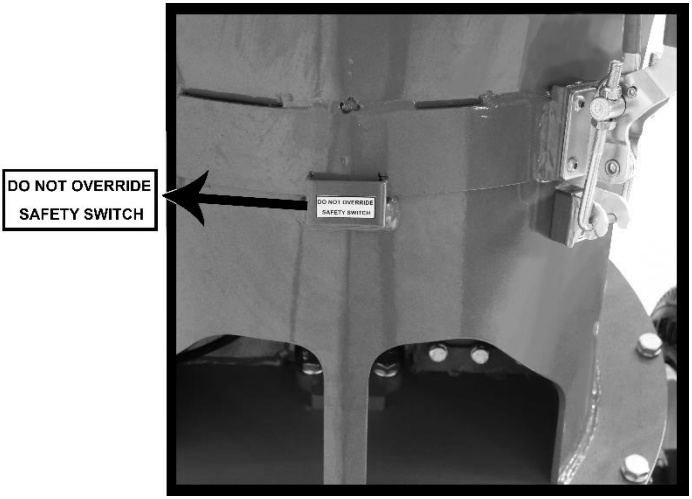

This sticker is located on the safety switch on the lower infeed chute. Safety switches have been located in areas to maintain safe operation. Do not tamper, modify or remove any safety switches on this machine.

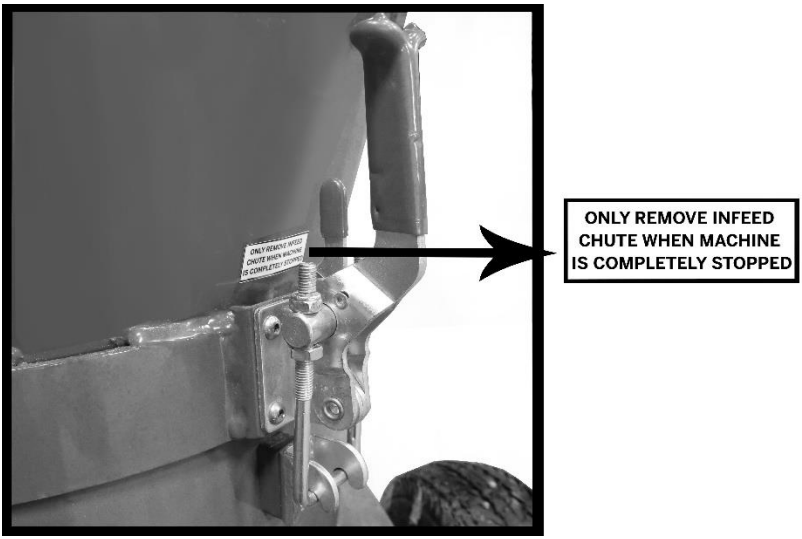

This sticker is located behind the infeed chute latches. When operating the machine, only remove the infeed chute after the emergency stop has been actuated, the engine is switched off, and after both the engine and the chipping rotor have come to a full stop.

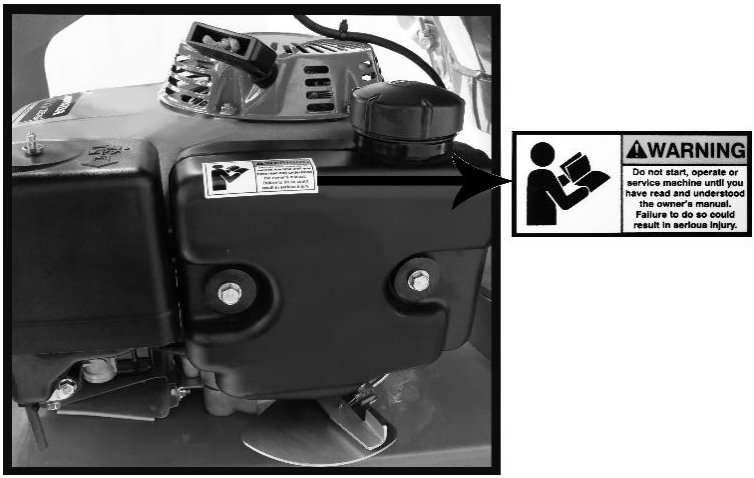

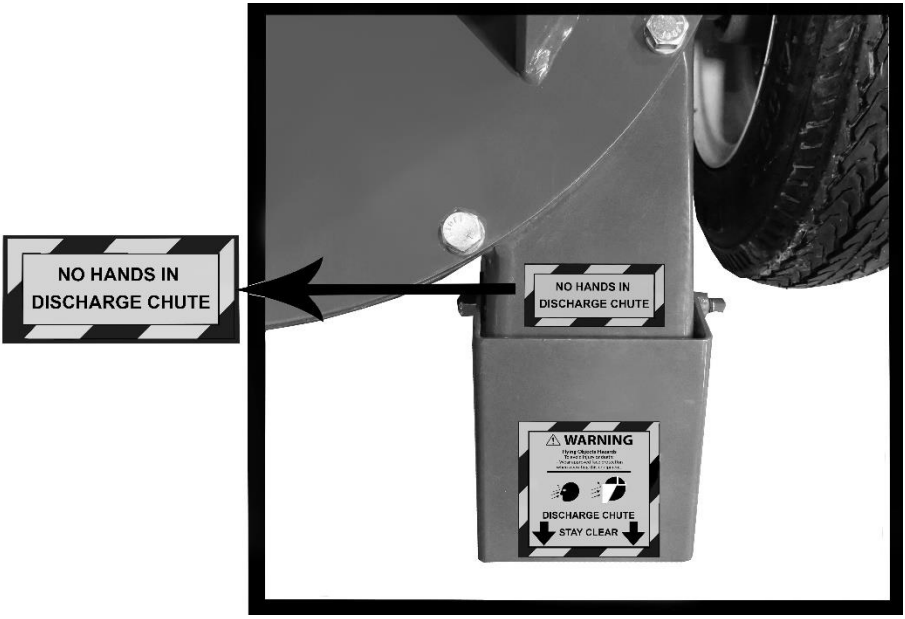

This sticker is located on the discharge chute. When operating the machine, at no time put hands or any body part into discharge chute. If hands or any body part are inserted into the discharge chute during operation, serious injury or death may occur. If the woodchipper is jammed, the woodchipper must have come to a complete stop, the emergency stop must be activated (down) and the throttle control must be in the engine stop position. Then any debris in the discharge chute can be removed safely.

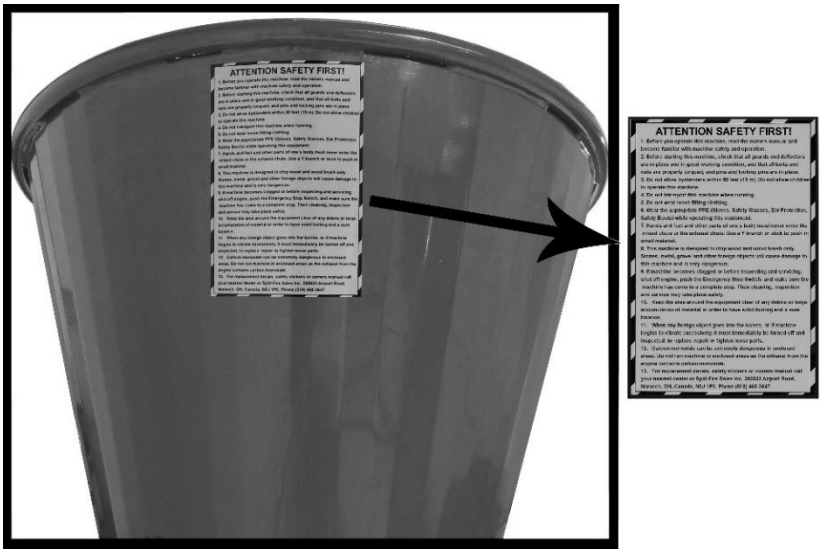

This sticker is located on the back of the infeed chute. This sticker is a visual pre-run checklist for operators to study before they operate the machine. Even after reading the owners manual, this pre-run checklist must be ready to ensure the operator is wearing proper PPE and understands safe operation.

This sticker is located in the infeed chute. It states the requirement of eye protection, and a full-face shield is recommended. Wood flyouts may occur and the correct PPE will ensure that the operator is safe.

2.2 Wood Handling Safety

It is important that the operator understand wood safety when operating a woodchipper. A general understanding of wood chipping practices will make the operation easier and safer.

When cutting trees and tree limbs always use the appropriate PPE and correct tools. If the tree is large, get help to make the job easier and safer. Stack the branches and sticks in an organized pile away from muddy patches. Muddy branches and sticks could have dirt, gravel and other foreign material stuck to them which could damage the woodchipper. Always give the branches and sticks a quick visual inspection before feeding into the chipper. Foreign material will damage the woodchipper and could cause serious injury or death.

This 4090 chipper has been designed for a max capacity of 4” diameter. If branches are larger than 4” diameter, utilize the oversize sections as firewood. If the branches are 4” diameter and under, cut the branches as follows:

- ✓ Cut to a manageable length of no more than 6’ long.
- ✓ If branches are twisted and curvy, it may be beneficial to cut the branches into shorter lengths for ease of transportation and feeding.
- ✓ If the branches have large Y sections, these may need to be trimmed to enable them to be fed into the chipper. Keep in mind, any branches with a Y can be utilized as forked push sticks to feed tough and stubborn material into the infeed chute.
- ✓ A large armload of small sticks and leaves can be loaded into the infeed chute. This type of material may need to be pushed in with a forked push stick.
- x Do not load branches with mud, dirt, nails, spikes, or foreign material. This will cause damage to woodchipper and could cause injury or death.

Safe operation with clean branches and sticks will allow for safe and effective operation of the machine.

2.3 Operation Safety

Carefully read and understand all the instructions pertaining to the woodchipper in the operator's manual before operating your new machine. Anyone who operates or services this machine must read the owner's manual first. If any doubt or question arises about the safe and/or correct method of performing anything in this manual, contact our representatives at the Split-Fire head office.

Avoid accidents by being alert and recognizing potential hazards. Not all possible circumstances can be anticipated in this manual. Keep your woodchipper and work area safe for yourself and others. Proper PPE , care and safety are your responsibility.

NOTE! If your woodchipper is equipped with a Honda engine or any other attachments, be sure to read the appropriate manuals. This 4090 chipper must never be used indoors or in a unventilated area. The engine will produce harmful carbon monoxide that can seriously injure or kill.

> The engine exhaust from this product contains chemicals known to the State of California to cause cancer, birth defects or other reproductive harm.

x Never allow untrained persons to operate or service this woodchipper.

x Never let persons under the age of 18 operate this woodchipper.

✓ The owner is responsible for accidents and injuries to themselves and/or other persons operating their machine. If others are permitted to use this machine it is the responsibility of the owner to train and supervise users.

- ✓ New users may operate this machine in a clear, unobstructed area under the supervision of an experienced operator, only after they have read and understand the owner's manual.
- ✓ Only allow responsible adults who have read the owner's manual and are familiar with the controls to operate the woodchipper.
- ✓ Inspect your machine each time before use. Special attention should be taken that all components are in place, damaged or missing parts are replaced, and that all the safety decals highlighted in the safety labels section are in place and visible on the machine.
- ✓ Only one person may operate the machine at any time. More than one operator greatly increases the chance of personal injury or death.
- x Never leave machine unattended while running.
- x Never operate the machine when under the influence of alcohol or drugs.
- x Do not alter, add accessories, or attachements to your woodchipper without the approval of the manufacturer. Doing so without the manufacturer's approval WILL VOID THE WARRANTY. If attachments have been added with approval of the manufacturer, be sure to keep safety labels visible.
- ✓ Your machine is designed to chip wood only! Stones, metal, gravel, and other foreign objects will cause damage to the machine and will increase the chance of personal injury or death.
- ✓ Always wear proper PPE before working on the worksite and before starting and operating your 4090 woodchipper. Proper PPE must include, but not limited to – Eye Protection, Ear Protection, Foot Protection, Hand Protection.

2.4 Worksite Safety

Worksite safety is very important for operator safety. A clean organized worksite will allow the operator to work safely and effectively.

- ✓ Keep area around the woodchipper clear from tall grass, debris, tools, and large pieces or wood at all times.
- ✓ Operate woodchipper on a dry level surface only.
- x Do not operate machine when distracted by others. Keep children and pets at least 50 feet away from the work area to protect them from possible injuries. Keep other distractions such as electronic devices, cell phones, etc. away.
- ✓ Only use machine during daylight hours. Use of this machine without proper lighting can lead to personal injury or death.
- ✓ Protect yourself at all times while operating your machine. Safety glasses, a wood working face mask, hand protection, steel-toed boots and ear protection must be worn at all times.
- ✓ The operator must wear fitted clothing at all time. Loose clothing can increase the risk of injury or possible death.
- x Do not transport this machine while the motor is running. This may cause permanent damage to your woodchipper.
- ✓ Always disconnect the spark plug when the woodchipper is being serviced.

2.5 Option Safety / Operation

2.51 Engine Guard

The Engine guard is an option to help increase protection of the engine on your woodchipper. This option does not affect woodchipper operation in any way. If installation is not completed by a Split-Fire technician, follow the installation manual associated with the option.

Engine Guard Safety

- Ensure that the engine guard is fastened tightly via 4 bolts
- Do NOT hang tools or heavy items off the engine guard
- Verify that the emergency stop is properly fastened and operating correctly

Engine Guard Operation

The engine guard is a static option that increases engine safety. For more access to engine components, (Air Filter, exhaust, recoil start, etc.) during service, the engine guard may be removed. This can be completed by removing 4 bolts (2 on each side) that hold the guard in position. Before operation starts, the engine guard must be securely repositioned in place to ensure engine safety and emergency stop functionality.

2.52 Heavy Duty Tire / 4 Bolt Hub

The heavy-duty tire / 4 bolt hub is an option to increase the duty of the hubs and tires. The option does not affect woodchipper operation in any way. If installation is not completed by a Split-Fire technician, follow the instruction manual associated with the option.

Heavy Duty Tire / 4 Bolt Hub Safety

- Do NOT exceed 100 KPH (60 MPH) when towing the woodchipper
- Do NOT exceed 25 PSI
- Tires pressure must be set to 20-25 PSI
- Torque wheel lug nuts to 65 ft/lbs

Heavy Duty Tire / 4 Bolt Hub Operation

The heavy-duty tire / 4 bolt hub is a static option that increases the duty and weight rating of the woodchipper. The heavy-duty tire / 4 bolt hub can be used at higher speeds when towing over rough and uneven terrain. Hubs should be greased every 5000 kms during regular schedule maintenance.

2.53 Lights and Fenders

The fenders and lights option are an option that make the woodchipper compliant for road tow in certain districts. Furthermore, it increases safety when towing the woodchipper on public roads. The option is designed so the lights are attached to the fender for ease of installation and service. If installation is not completed by a Split-Fire technician, follow the instruction manual associated with option.

Light and Fender Safety

- Do NOT exceed 100 KPH (60 MPH) when towing the woodchipper
- Always connect the lights correctly to the towing vehicle
- Indicate lane changes and brake properly

Light and Fender Operation

The fenders and lights option are a static option that make the woodchipper compliant and safe. It increases safety when towing the woodchipper on public roads. This option does not affect woodchipper operation in any way. It is important that this option be fitted to any woodchipper in a district that requires signal / brake lights.

The operator must always connect and verify correct operation of the lights before towing begins. This can be done by activating the 4-way hazard flashers, left and right signals, then walking behind the chipper to finally verify that the lights are operating correctly. If the lights are not functioning correctly, the woodchipper must not be towed and replacement parts must be purchased.

2.54 Rear Hitch

The rear hitch is an option that allows the user to tow a utility trailer behind the woodchipper. This option is for off-road use only!! If installation is not completed by a Split-Fire technician, follow the instruction manual associated with the option.

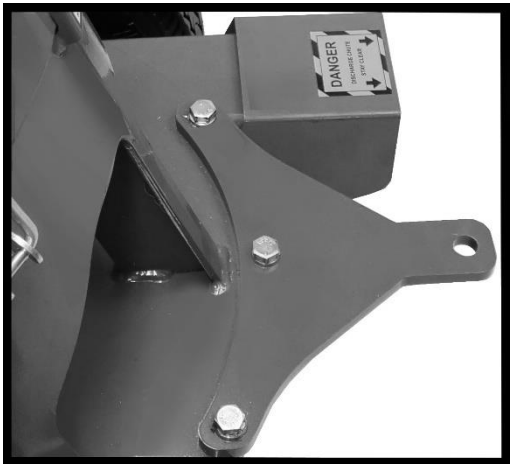

Rear Hitch Safety

- Do NOT use for on-road use
- Do NOT tow machinery / trailers faster than 40 km/h
- Do NOT tow machinery / trailers with a tongue weight over 200 lbs.
- Do NOT tow machinery / trailers with a gross weight over 800 lbs.

Rear Hitch Operation

The rear hitch is a static option that allows the user to tow machinery / trailers behind the woodchipper. This option is for off-road use only!! The rear hitch option does not affect woodchipper operation in any way. The rear hitch option has a max tongue weight capacity of 160 lbs. It is important that when chipping, the machinery / trailer be either turned away from the discharge chute or unhooked from the woodchipper for both operator safety and damage prevention. The rear hitch can either be used as a farm style hitch or can be fitted with a 2” ball for ease of use with any utility trailer.

2.55 Caster Wheel

The Caster wheel option allows the user to move the woodchipper by hand, without needing a towing vehicle. The castor wheel is only to be used when the hitch has been removed from the woodchipper. If installation is not completed by a Split-Fire technician, follow the instruction manual associated with the option.

Caster Wheel Safety

- Do NOT utilize in conjunction with tow hitch
- Do NOT move the machine faster than 12 km/h
- Do NOT move the machine over uneven / bumpy terrain

Caster Wheel Operation

The caster wheel option allows the woodchipper to be pushed around by 1 or 2 operators. The caster wheel option is to only be used on smooth surfaces (grass, smooth dirt, gravel, pavement, concrete). It is very important that before wood chipping operations begin, that the stand leg is pinned in the down position and that the castor wheel is not touching the ground. This will stop the woodchipper from rotating due to chipping torque.

3. Chipping Capacity

This 4090 chipper has been designed to chip brush and branches up to 4” in diameter. Brush and branches must be cut to the appropriate length to ensure the chipper processes the material properly. Brush and branch material will vary due to the ambient temperature, type of wood, moisture content, and the age of material since felling. Overloading the will cause premature blade and belt wear and in certain cases, bearing and engine damage can occur.

Cut the following size branches to the following lengths to ensure chipper operation, and operator safety:

1. 2” Branches / Brush = 12 Feet. This diameter can be easily chipped without loss of rotor inertia. Keep branches and brush under 16” feet for ease of mobility and safe loading.

2. 3” Branches / Brush = 6 Feet. This diameter takes medium power and will cause the rotor to lose inertia when chipping lengths over 6 feet. Keep 3” diameter branches and brush under 6 feet for operator mobility and safety when loading.

3. 4” Branches / Brush = 3 Feet. This diameter takes maximum power and will cause the rotor to lose inertia when chipping lengths over 4 feet. Keep 4” diameter branches and brush under 4 feet for operator mobility and safety when loading.

When chipping any branches / brush, the operator must be constantly vigilant of the chipping operation. If the operator notices the chipper losing rotor inertia, the material must be removed so the chipper can regain RPM’s and rotor inertia. Full instructions can be found on page 27 (Operation)

4. Operation

4.1 Before Operation

Before operating your machine, inspect it to ensure it is in good, safe working order.

1. It is important that you have read and understand all safety requirements before operating the 4090 woodchipper. Read both the 4090 woodchipper, and engine owner's manual before operating the machine.
2. Verify that the blades are in good operating condition. This can be checked by removing the infeed chute and checking that the blades are sharp and tight. If the blades are dull or have nicks and dents in them exceeding 1/16" the blades must be turned to a fresh side or replaced. If the blades are loose or being replaced, they must be retorqued to 35 ft/lbs. For full blade change instructions, see details on page 34.

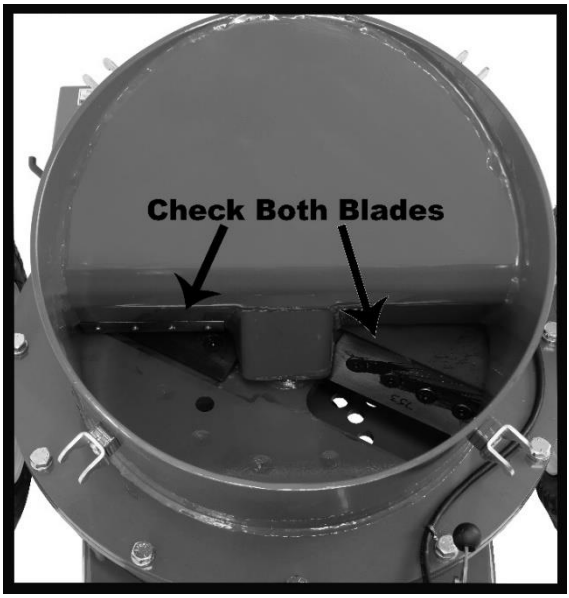

3. Check that the tires have adequate air pressure to ensure that the chipper is sitting level. This can be visually confirmed, or double checked with a tire pressure gauge. Tire pressure must be between 20 – 25 PSI. Do not exceed 25 PSI.

4. Be sure that the infeed chute is securely attached via the 4 latches. The 4 latches must be in the locked position. If the latches are not tight, see full latch maintenance details on page 40.

5. Check that the kickback guard in the infeed chute is in good condition and operating properly. If the guard is broken or missing sections, do not operate the woodchipper. New parts can be ordered by calling Split-Fire's head office.

6. Verify that the motor is in good running condition. Full details on oil level, air filters, gasoline, spark plugs, etc. are all located in the engine owner's manual.

7. Check that the Emergency switch is functioning properly. When pressed down, the emergency stop should click and remain in the down position. To reset the emergency stop switch, twist clockwise and pull lightly. The emergency stop button should click and spring up to the run position. If the emergency stop button does not operate properly do not run the machine. The emergency stop must be replaced and working properly before operation begins.

8. Clean the worksite around the chipper. Make sure there are no trip hazards, branches are in organized piles, and that the woodchipper is on level ground.

9. Put on the required PPE. Safety glasses / face shield, ear, hand, and foot protection are all required when operating this 4090 woodchipper.

10. Once the "before operation inspection" is completed, the woodchipper is ready for operation.

4.2 Operation

Once the before operation inspection has been completed, operation can begin.

1. Double check that all the required PPE is being worn. Safety glasses / face shield, ear hand, and foot protection are all required when operating this 4090 woodchipper.
2. The engine can be started. Place the throttle in the Choke/Start position (Verify that the throttle lever is pulled all the way to the choke/start position. The engine will not start if the level is not pulled far enough). Then pull the recoil start on the top of the motor. Several pulls may be required to get the engine to start.
3. Once the engine has started, move the throttle position to the idle location and allow the engine and chipper to warm up for 1-2 mins. It is okay if the woodchipper rotor turns slowly as the engine warms up.
4. After the engine is warm, the throttle can be moved from the idle position to the full throttle position. It is very important that the 4090 woodchipper be run a full throttle all the time. This woodchipper needs full RPM's for the clutch to engage and for the rotor to build inertia to assist in chipping large branches.
5. The engine will take 10-15 seconds to achieve full RPM. Once full RPMs have been achieved chipping can begin.
6. Start chipping with small branches first. If any abnormal noises are heard, immediately shut down the woodchipper by pressing the emergency stop.
7. If the woodchipper is chipping the branches quickly and easily, chipping can continue with large branches.
8. When chipping larger branches be aware of engine and rotor RPM. If a large hardwood branch is being loaded, be aware that the chipper may slow down and ultimately stop. If the chipper stops under engine load, it could damage the belt.

When a larger branch is being feed, pay close attention to engine and rotor RPMs. If the RPMs slow, pull back the branch to allow the woodchipper to recover RPMs. Once the woodchipper is operating at full RPMs, the rest of the branch can be fed into the infeed chute.

Do not attempt to pull back branches that are beyond the lip of the infeed chute. Branches this far into the chipping cycle will feed through as the amount of wood remaining is manageable.

9. Continue chipping as needed. Always be vigilant of your surroundings on the worksite and on the material being fed into the 4090 woodchipper.

   If any abnormal noises or movements are observed, stop the woodchipper immediately by pushing the emergency stop switch. Contact Split-Fire immediately concerning the issue.

Once chipping has been completed, follow these shutdown steps:

1. Allow the woodchipper to run under no load for 1-2 mins. During that time verify that the infeed chute is totally empty. If there are any remnants, use a forked push stick to clear the infeed chute. This will allow the woodchipper to clean itself out and run under no load.
2. Slow the engine RPM to an idle. Once the engine has lowered RPMs to an idle, the throttle control can be moved to the stop position.
3. The emergency stop can be actuated to prevent any false starts.

4.21 Heavy Duty Clutch (Overheat Protection) Operation

Your 4090 woodchipper may be equipped with the heavy duty clutch option. This clutch is configured with a clutch pad system and a dual v belt for heavy operation. The clutch is also equipped with overheat protection, so in case of a jam, the 4090 will automatically shut off to protect the power transfer system.

If chipping larger branches causes a jam, the Heavy-Duty Clutch may slip and heat up, or even cause the clutch to overheat if allowed to slip for roughly 25 seconds. If this happens the overheat sensor will turn the engine off to keep the clutch from burning out and it will illuminate the overheat light blue. In order to protect the clutch, complete the following:

1. Ensure that the engine is off, and the emergency stop is engaged.

2. Remove the infeed chute by releasing the four latches and liftin it off the machine to gain access to the top of the rotor.

3. Inspect the rotor and chipper box for jams and ensure that the rotor spins freely. If the rotor does not spin freely check that the rotor flails are not contacting the chipper box, and that the bed blade is not contacting the chipper blades. (Be very careful of sharp blades).

4. Once all the jams are cleared and the rotor is completely free to rotate replace the infeed chute and attach all latches, then disengage the emergency stop.

5. To cool the clutch, you can wait approximately 30-45 minutes until the overheat light turns off, then the chipper can be started and chipping can commence.

6. You can also hold the overheat button down and start the machine and let run at half throttle under no load (not chipping) for 3-4 minutes or until the light turns off allowing the clutch to cool more quickly.

4.3 After Operation

After chipping has been completed, after operation procedures must be completed for safety and machine maintenance.

1. Once the woodchipper has completely stopped and cooled off, remove any small debris on the exterior of the machine.
2. The woodchipper should be cleaned after every use. This can be done with a water hose, pressure washer, or high-pressure air. All the debris must be removed, including any leaves / debris around the air filter, recoil cooling holes, and lower guard air vents.
3. Give the woodchipper a visual inspection. Check for loose fasteners, latches, oil leaks, etc. and repair as needed. It is important the woodchipper be in an excellent mechanical state for safe and effective operations.
4. Regular maintenance must be completed before the next wood chipping operation. See maintenance schedule on page 32.
5. Store the woodchipper in a secure, clean dry location if possible. This will reduce the risk of theft, corrosion and damage. See storage details on page 37.

After chipping it is important to clean and maintain your 4090 woodchipper. This will properly prepare the machine for its next use.

4.4 Operation Troubleshooting

1. The woodchipper has jammed, and the belt smokes when the chipper is started and when RPM's are increased.

This is occurring because the chipper has been overloaded with too much wood and the result is a jam. The excess wood must be removed from the woodchipper. Ensure that the motor control is in the off position and the emergency stop is in the off (down) position. Then remove the infeed chute and remove / pull any excess wood from the chipping blade area. Also ensure that the discharge chute is empty of chips / debris. The rotor must be able to spin freely by hand. If it is stuck / jammed, a large stick can be used as leverage against a blade to spin the rotor counter clockwise. Once the rotor is spinning freely, place the infeed chute on the chipper and securely fasten it with the 4 clamps. Operation can than resume.

Do NOT attempt to use hands/feet for leverage. The chipping blades are sharp and will cause personal injury or death.

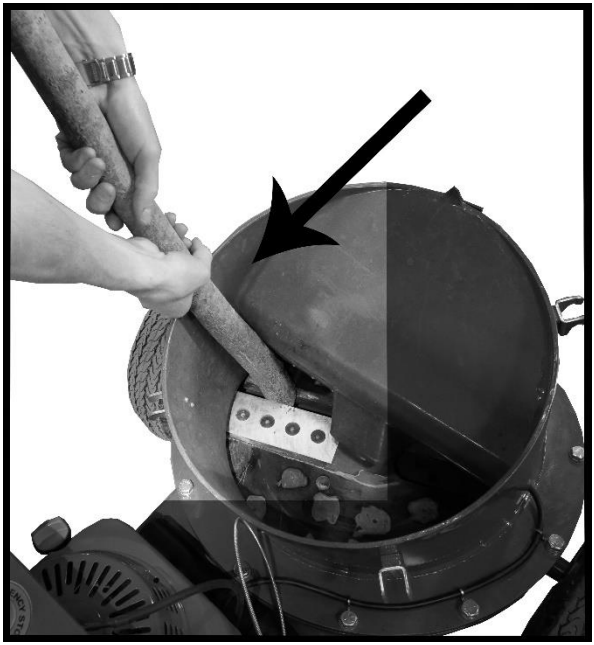

2. The woodchipper is chipping wood, but it gets jammed quickly and the RPM's slow down easily.

This is occurring because the blades on the chipper could be dull. When the chipping blades are dull, the machine is not as efficient. The motor will need to work harder to chip even small material. This can be fixed by completing blade maintenance. The blades need to either be flipped to a fresh side or replaced with new blades. See blade maintenance on page 34.

3. The woodchipper is chipping wood, but the wood does not self-feed and needs to be pushed into the infeed hopper for any chipping action to occur.

This is occurring because the blades on the chipper could be dull. When the chipping blades are dull, the machine is not as efficient, and the branches / sticks will not self-feed. As the blades begin to dull, the chipping action will become less efficient and the branches / sticks will not self-feed. This can be fixed by completing blade maintenance. The blades need to either be flipped to a fresh side or replaced with new blades. Once the blades have been replaced, the chipped will self-feed the branches / sticks with ease. See blade maintenance on page 34.

4. The woodchipper will not start.

There may be several issues causing this problem. It is best to always start with the engine. Check the fuel and oil level to ensure they are at the proper operating level. Also ensure that the engine is in the choke / start position, and the emergency stop is in the operating (up) position. If the problem persists, check the electrical safety system for defects. Check that the infeed chute and emergency stop are wired and operating correctly. If the engine still does not start, a licensed mechanic must diagnose the woodchipper, by checking the safety wiring first and then diagnosing any engine issues.

5. The woodchipper belt is smoking / slipping.

Verify that the woodchipper is not jammed. If the woodchipper rotor is spinning during operation, but the belt is still smoking / slipping when operating, the belt needs to be replaced. The belt on this chipper will wear over time and must be replaced. This can be done by first ensuring the emergency stop is in the off (down) position and the engine control is in the stop position. Then remove the belt guard (4 bolts). Then the belt can simply be removed by grabbing the belt pulling down and slowly rotating the pulley. This will cause the belt to ride off the pulley in a downward motion. Once the belt has been removed it can be inspected. If the belt is thin or has heavy wear marks it must be replaced. To install a new belt (Refer to Info Plate), simply place the belt on the clutch (engine) side pulley. Then place the other end of the belt on the rotor pulley side and rotate the belt / pulley slowly. This will cause the new belt to track on the pulley. Once the belt is on the pulley and is tracking properly, the belt guard must be replaced. Operation can then resume.

6. The woodchipper slows / bogs down when large branches are being chipped.

This is normal for large branches in the 3.5” – 4” range. If a large branch is to be chipped. It is important that the operator be ready to pull back the branch once the chipper RPM’s slow to below 50% RPM. Once the large branch has been inserted, the chipping blade will grab the branch to self-feed. Due to the branches size and strength, the woodchipper will lose rotor inertia and will start to slow down. As the rotor slows down, the operator must pull the large branch back to allow the woodchipper to recover RPM’s. It is important that the operator NOT attempt to put his/her hands in the infeed chute to pull back large branches. Once the large branch has passed the infeed chute rim, the branch must be left alone.

5. Maintenance

Maintaining your 4090 woodchipper is very important and will ensure that the machine lasts year after year offering safe, smooth and reliable operation.

5.1 Engine Maintenance

Read the engine specific owner's manual associated with your woodchipper. General engine maintenance includes some but is not limited to the following:

- → Oil Changes
- → Air Filter Changes
- → Spark Plug Changes
- → Fuel Recommendations
- → Cleaning of Fuel System

When refueling your engine, it is important to refuel with high test fuel (Not E85 Ethanol). Small engines will start easier, operate smoother and will last longer with high test fuel. High test fuel will also last longer before decomposing and clogging the carburetor. Any fuel that sits longer 3-4 weeks is recommended to have fuel conditioner added to ensure the fuel remains stable.

5.2 Woodchipper Maintenance

5.21 Blades / Rotor Maintenance

Your woodchipper will have 2 blades. Blades are a consumable item that will need to be sharpened or replaced when they get dull. Woodchipper blades can be sharpened 2-4 times depending on the depth of each sharpen. These woodchipper blades are case hardened and must be sharpened at the same angle, but not be sharpened further than .125" from the original edge. Both blades must be sharpened equal amounts to maintain blade balancing.

When removing the blade use a ¾" locking pin to keep the rotor from spinning. Use a ¼" hex key to remove the 4 bolts per blade. It is important to ensure that the hex pattern in the bolt head is clean, so the hex key sits fully in the bolt to prevent stripping the bolt head. Once the blades have been removed, they can either be flipped to a sharp side or replaced with a new blade.

When installing blade(s) it is very important to follow the proper steps. Anti-seize (silver or nickel grade) paste must be applied to the bolt threads and head. The rotor and blade surface must be clean and dent free. Then the 4 bolts per blade can be threaded in, hand tight. With the ¾" rotor locking pin in place, the blade(s) can be tightened with a torque wrench to 35 ft-lbs. All 4 bolts per blade must be torqued to 35 ft-lbs. (Only use an accurate torque wrench). Once the blade(s) have been torqued, they are ready for operation.

WARNING!!!: All chipper blade bolts and anvil bolts must be replaced every four torquing cycles, Failure to do so could cause harm to the woodchipper or injury or death to the operator.

5.22 Rotor Maintenance

Your woodchipper rotor will not need specific general maintenance, but when changing blades and maintaining your machine it is important to inspect the rotor to ensure that it is in good operating condition.

When changing blades, always inspect your rotor for defects. This can be done by slowly rotating the rotor by hand and inspecting for cracks and defects. Furthermore, when changing blades, ensure that the rotor blade surface is smooth, and the threads are clean and in good working condition. If any cracks or defects are observed, call Split-Fire service immediately. Do not operate the machine if defects are observed.

5.23 Anvil Maintenance

Your woodchipper anvil will need to be maintained on a regular basis. Every time the woodchipper blades are switched, the anvil must be inspected and reset to ensure proper anvil / blade spacing. It is

important that the anvil is always set within .020” - .040” of the chipping blade. This will allow the woodchipper to chip the wood easily and will also extend blade life.

After the blades have been replaced and are properly installed the anvil can be set. First loosen the 4 anvil bolts. Keep the 4 bolts snug so the anvil blade is not loose but can be moved with some force. Turn the rotor / blade to the anvil. Then adjust the anvil to a position of .020” - .040” above the tip of the cutting blade. Move the rotor back and forth and adjust the anvil blade as necessary. After the anvil blade has been set, turn the rotor to check the clearance on the second blade. Both blades should be equal distance, but if variance is observed, see the anvil to the tallest blade. After the anvil has been properly adjusted, the 4 anvil bolts can be torqued to 55 ft-lbs. (Only use an accurate torque wrench). Once the anvil has been torqued, the woodchipper is ready for operation.

5.24 Bearings Maintenance

Your woodchipper has two main rotor bearings. These rotor bearings enable the rotor to spin smoothly at a high rpm. These bearings must be maintained. Both bearings need to be greased with 2 pumps every 50 hours. Do not over grease. Over greasing will cause the bearing seals to lose effectiveness and will ultimately ruin the bearing.

5.25 Clutch Maintenance

Your woodchipper utilizes a clutch to transfer engine power to the rotor. This clutch does not need regular maintenance but should be inspected every 50 hours to ensure good operating condition. During the inspection, the upper housing must move freely up and down to

engage the belt. Furthermore, the clutch belt contact faces must be smooth. If wear ridges are observed, clutch performance will be reduced and should be replaced to ensure excellent woodchipper performance.

5.26 Belt Maintenance

Your woodchipper utilizes a single A belt to transfer engine power to the rotor. As engine RPM's are increased, centrifugal force causes the clutch to bear down the belt which causes the rotor to spin at a high RPM. This belt is a consumable and will wear over time. The belt should be inspected every 10 hours of operation. During operation, a jam may occur. This will cause the clutch to slip on the belt causing a wear spot. If a jam occurs for more than 20 seconds, the belt must immediately be replaced.

To change the belt, the belt guard must be removed. Then the belt can simply be slightly turned and slipped off the rear rotor pulley. During inspection, the belt must be checked for overall wear and deep wear spots from jams. If the belt is worn, it must be replaced with a Kevlar belt in the size specified on your chipper's information plate.

To replace the belt, place the belt over the clutch, pull it tight, then start the belt on the rear pulley, and complete the installation by simultaneously pushing and turning the belt onto the pulley.

Belt Tension Procedure

Belt tension is important for the 4090 chipper to operate properly. If the belt tension is too loose, the belt may slip causing excessive belt wear, and if the belt is too tight, rotor RPM, may not reach the correct speed. The correct belt for the 4090 chipper is a Kevlar belt in the size specified on your chipper information plate. Gates "Predator" belts are the correct OEM supplied belt, which offers the best life and performance. The belt on the 4090 is a wear item. If needed other belts can be used however different manufacturers belts may be slightly larger / thinner, and belt tension will need to be set accordingly.

Check and modify belt tension by completing the following steps:

1. Ensure that the motor is off, and the emergency stop is engaged.

2. Remove bottom belt cover. This is completed by removing the 2 wing bolts and pulling the steel belt cover from under the machine.

3. As shown in the image, pinch the belt with medium force. The gap between the belts must be a ½” gap (+ - 3/16”).

Note, that if a belt is brand new, it may be tighter. To verify correct tension with a new belt, replace belt cover, and run the 4090 chipper at full RPM for 10 mins. Then recheck belt tension. The 10-minute run will break in the belt and will show a more accurate tension.

4. If the belt is not tensioned correctly, loosen the 4 engine mount bolts. Then slide the engine back and forth as needed.

Note, only a small movement on the engine changes the belt tension quickly. Move the engine at 1/8” increments for best results.

5. Retighten engine, double check the belt for the correct tension.

6. Once the belt gap is showing in the correct 1/2” gap spec, the belt guard can be reinstalled, and the chipper is ready for operation.

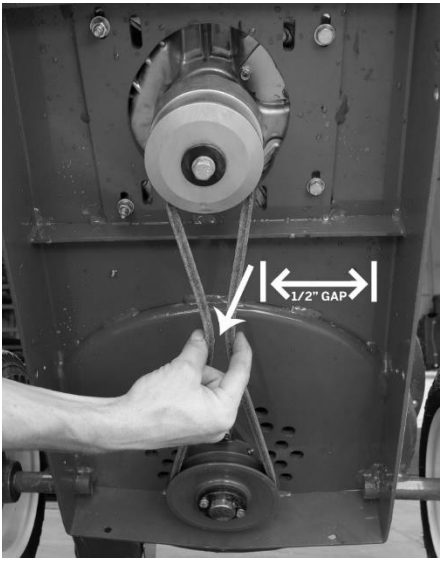

5.27 Heavy Duty Clutch Belt Tension and Maintenance

Belt tension is adjusted differently on Heavy-Duty Clutch equipped chippers as the clutch does not operate the same way as the standard slipper clutch and uses a belt tensioner to allow for more

accurate belt adjustment. To tension the belt correctly complete the following steps:

1. Ensure that the engine is off, and the emergency stop is engaged

2. Remove bottom belt cover. This is completed by removing the two wing bolts and pulling the steel belt cover from under the machine.

3. If using a Gates Optibelt tension gauge or other tension gauge the tension should be approximately 60 to 80 lbs of tension on each belt. If you do not have a tension gauge pinch the belt with approximately 60 lbs of force. When doing so each side of the belt should flex ½" (± $^{3}/_{16}$") in or out. This method will work however a tension gauge is recommended for best results.

Note, to verify correct tension with a new belt, replace belt cover, and run the 4090 chipper at full RPM for 10 mins. Then recheck belt tension. The 10-minute run will break in the belt and will show a more accurate tension.

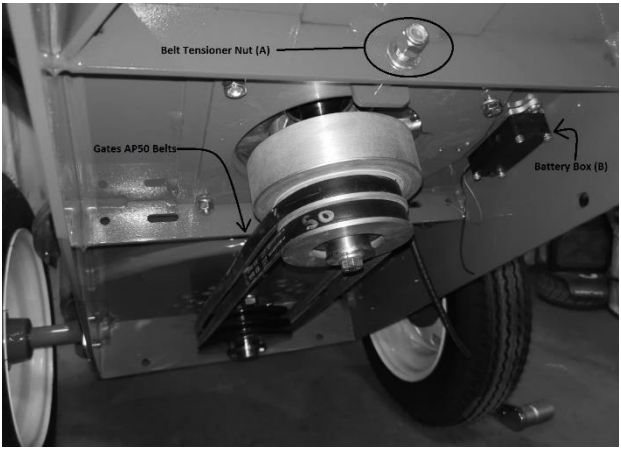

4. If the belt is not tensioned correctly or the belts need to be replaced, loosen the four engine mount bolts. If replacing the belt use the nut on the front of the tensioner bracket (A) to loosen the old belt making sure that the nut is in contact with the engine plate brace. Then tighten the tensioning nut by making small adjustments of approx. ¼" turn for best results.

5. After adjusting the tensioner, tighten the four engine bolts to 35 ft-lbs and check the belt tension again as described in step 3. If belt is not correctly tensioned repeat steps 4 and 5 until proper tension has been met.

6. Once belt is tensioned correctly, replace the belt cover, disengage the e-stop, and you are ready to begin chipping.

The Heavy Duty Clutch system is equipped with a small battery box (B). It is important that the batteries get changed once a year. The batteries are AA and are usually changed when checking belt tension.

5.28 Wheel Maintenance

Your woodchipper utilizes 8" wheels for ease of mobility. The wheels must be maintained properly to ensure safe towing and chipping operations. The wheels must always be maintained at 20-25 Psi. This will ensure the woodchipper can be towed smoothly. Furthermore, every 100 hours, the wheels should be greased and checked for smooth operation. This can be done by raising the chipper and turning the tire for smooth operation. The dust cap is to be removed and the bearings to be greased to ensure smooth operation.

5.29 Latch Maintenance

Your woodchipper is assembled with 4 latches which fasten the infeed chute to the main frame of the woodchipper. It is important that these latches are in good working condition to ensure that the infeed chute is fastened securely at all times. If a latch breaks or becomes faulty do NOT use the machine and replace the defective part immediately.

To adjust the latch tension, turn the 2 nylock nuts up or down equally to increase / decrease latch tension. The correct tension is when it requires approximately 25 lbs of force to close the latch into the locked position. If the latch is excessively difficult, the nylock nuts should be slightly loosened. If the latch requires no force to close, the

nuts should be tightened equally to meet the required 25 lbs force required to lock the latch.

5.30 Torque Spec Chart

This spec chart lists all the torque specs for every fastener located on the 4090 woodchipper. It is important that all fasteners be torqued to the correct specification to ensure safe operation. WARNING – Incorrect torque specs can result in serious injury or death!!!

Description	Type	Quantity	Torque Spec
Blade(s)	7/16” x 1” Flat	4 (8)	35 ft-lbs. w/ anti-seize
Anvil Blade	7/16” x 1”	4	55 ft-lbs.
Top Cap Bolts	½” x 1	12	60 ft-lbs.
Top Bearing Bolts	5/8” x 1 ½”	2	80 ft-lbs.
Bottom Bearing Bolts	5/8” x 1 ½”	2	80 ft-lbs.
Engine Bolts	3/8” x 1 ¼”	4	35 ft-lbs.
Hitch Bolts	3/8” x 1 ¼”	4	35 ft-lbs.
Engine Guard Bolts	3/8” x 1”	4	35 ft-lbs.
Lug Nut Bolts	½” x 1”	8	60 ft-lbs.

6. Storing Your Woodchipper

When storing your woodchipper special attention should be drawn to the areas below. Storage steps depend on duration which can be found below.

1-4 Weeks Storage

1. Clean your machine as listed in the “after operation” section.
2. Turn OFF the fuel control on the engine.
3. Add fuel stabilizer to maintain fuel quality.
4. Store the woodchipper in a dry, clean, and secure area.

It is not uncommon for Split-Fire products to be stolen due to their value and ease of mobility. Always store your machine in a secure area.

5+ Weeks Storage

1. Clean your machine as listed in the “after operation” section.
2. Add fuel stabilizer to maintain fuel quality and run engine for 5 minutes to fill carburetor with stabilized fuel.
3. Turn OFF the fuel control on the engine.
4. Remove the infeed chute and spray a light oil mist on paint-less areas such as the rotor, top cap, latches, and infeed chute. This will prevent any surface rust during long term storage. (This oil must be washed off with biodegradable solvent when the machine is placed back into service).
5. Store the woodchipper in a dry, clean, and secure area. If the machine is to be stored outside, tightly wrap the machine in a tarp to reduce moisture and UV exposure.

It is not uncommon for Split-Fire products to be stolen due to their value and ease of mobility. Always store your machine in a secure area.

7. Towing your Woodchipper

Take extra care when hooking up and towing your woodchipper. Before towing, make sure your woodchipper is in safe towing condition. Inspect the tires, bearings, lights, hitch and safety chains. Make sure the hitch is attached securely and locked via a bolt and lynch pin when attaching the woodchipper to a vehicle.

The hitch coupler and hitch ball must fit tightly when locked. Attach your woodchipper to your vehicle with the hitch and safety chains. It is important that the safety chains cross under the hitch to prevent the hitch from dropping to the ground should the hitch fail and disconnect. (Each chain has a breaking strength that exceeds the gross weight of your woodchipper).

Towing a woodchipper puts additional weight on your vehicle. Increase the space around your vehicle to drive and stop safely. When towing your woodchipper, avoid potholes, curbs and other obstacles. At high speeds, large bumps and erratic driving may result in a damaged woodchipper. Follow road rules at all times.

Do not exceed 85 KPH (50 MPH) with low speed standard tires.

With highway tow package, do not exceed 100 KPH (60 MPH)

Adjust coupler locking pressure on ball before use. Place handle in locked position with ball in coupler. Tighten locknut against tension spring so that coupler is not loose on ball. Correct adjustment will allow handle to be released with moderate pressure applied to handle.

To open, pull up on coupler handle and rotate forward. Place coupler on ball. When ball is completely nested in ball socket, rotate coupler handle backward until handle is in locked position.

After towing for 50 miles, check coupler for tightness on the ball. Always check tightness before towing. Be sure coupler handle is in locked position at all times, with a bolt or lynch pin holding it securely in place.

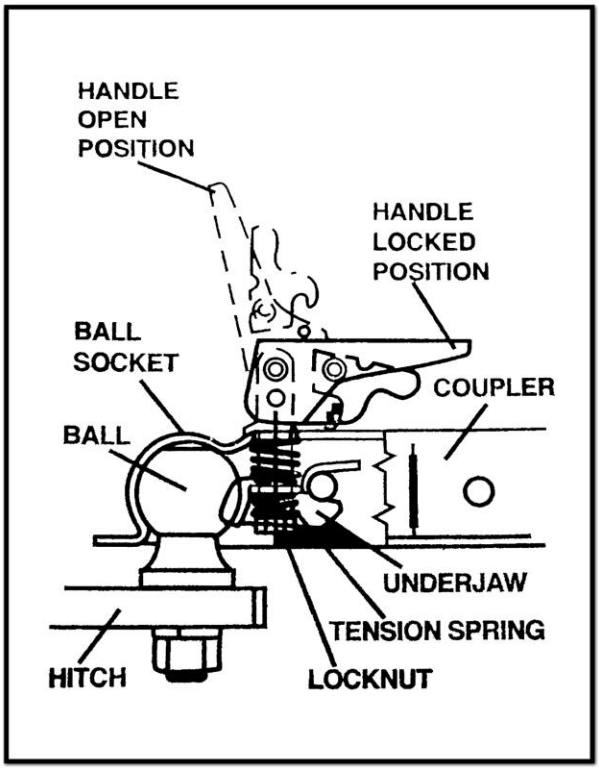

FAILURE TO OBEY THESE RULES CAN CAUSE THE WOODCHIPPER TO DETACH WHILE TOWING WHICH MAY CAUSE SERIOUS INJURY OR DEATH! NEVER EXCEED WEIGHT CAPACITY OF BALL OR LEAD LIMITS STAMPED ON COUPLER. ALWAYS USE SAFETY CHAINS PERSUANT TO INSTRUCTIONS OF TRAILER MANUFACTURER. ALWAYS USE CORRECT SIZE BALL SHOWN BY STAMP ON COUPLER. ALWAYS CHECK THAT BALL IS COMPLETELY INSERTED INTO COUPLER SOCKET AND THAT UNDERJAW IS SECURELY CLOSED AROUND THE BOTTOM OF BALL.

ALWAYS CHECK THAT COUPLER HANDLE IS PROPERLY LOCKED BEFORE TOWING. ALWAYS EXAMINE COUPLER AND BALL FOR DAMAGE BEFORE TOWING. REPLACE IF DAMAGED. AVOID SHARP TURNS AND STEEP VERTICAL ANGLES WHEN TOWING WHICH MAY BEND OR DAMAGE COUPLER OR ITS COMPONENTS.

8. Checklists

8.1 Pre-Start Checklist

By skipping one or any of these instructions greatly increases the chance of personnel injury or death. It is highly recommended to follow this procedure before each use of the woodchipper.

Is the machine on a level and stable surface?

Are all guards in place and in good condition?

Are all safety decals in place and legible?

Is the Infeed hopper in the correct position and securely latched?

Is the cutting chamber clear of debris and foreign objects?

Verify the rotor is in good condition and spinning freely?

Is the chip exhaust deflector mounted and positioned correctly?

Inspect pulleys and belts for wear and damage?

Verify the motor is tight and there are no fluid leaks?

Wearing fitted clothing and no jewelry?

Wearing eye protection or a full-face shield?

Wearing hearing protection?

Wearing hand and foot protection?

Do you have a partner to work with for safety?

Does someone know your work plans in case of emergency?

Verify the machine, is it up to date on maintenance?

Refer to Honda motor owner's manual for engine operation and safety instructions.

8.2 Safe Feeding Checklist

Materials must be fed into the chipper safely to avoid injury to the operator and to ensure long woodchipper lifecycle. Follow these feeding procedures to keep yourself and other operators safe.

Feed material only when the chipper is at full operating speed.

Feed material from either side of the machine. This will reduce the risk of injury and will also make it easier to feed material while having good access to the emergency stop switch.

Keep hands and feet outside feed chute at all times.

Use a push stick to help feed small branches and brush. This will keep operators safe by keeping them away from the moving parts. Do not push materials into the chute with shovels, pitch forks, tools, etc.

Let go of material as soon it begins feeding into the woodchipper. Do not hold onto material to avoid being hit or dragged into the woodchipper.

Feed the branches butt end first. This will help the chipper feed material smoothly and will reduce jams and material kickbacks.

Never feed material with any part of your body. Always use a push stick.

Shut off the machine and wait for all the parts to stop Moving before servicing equipment.

8.3 Machine Operator Safety Instructions

1. Each person that operates this Split-Fire log splitter must read and understand this checklist and the rest of the owner's manual before operation.

2. Always wear ear, eye, hand, and foot protection when operating the woodchipper. Never wear loose clothing.

3. Before operating machine, check that all guards and deflectors, pins and locking pins are in place and are in a good working condition, and all the nuts and bolts are properly tightened.

4. Do not operate this equipment in the vicinity of bystanders. Do not allow children to operate this equipment.

5. Do not transport this machine while its running.

6. Body parts must never enter the in-feed or the exhaust chute. Use a long branch or stick to push in small material.

7. After starting machine always check the kill switch (on/off) to make sure it is operating correctly.

8. This machine is designed to chip wood and brush only! Stones, metal, gravel, and other foreign objects will cause damage to this machine and increase the possibility of personnel injury.

9. If the machine becomes clogged or before a routine inspection, shut off the engine, disconnect the spark plug cable(s) from the spark plug(s) and make sure the machine has come to a complete stop. Then cleaning and servicing can take place safely.

10. Keep the area around the equipment clear of any debris or large accumulations of material in order to have a solid footing and a sure balance.

11. Do not allow processed material to built up around discharge area. Blow chips away from the machine to prevent clogging or fire hazard.

12. When foreign materials of any type enter the chipper, or when the equipment starts to vibrate, it must be immediately shut off and inspected. Then replace, repair, or tighten any parts where needed.

13. Carbon monoxide can be extremely dangerous in enclosed areas. Do not run equipment in enclosed areas as the exhaust from the engine contains carbon monoxide.

14. Operate machine on a level surface only. Do not operate on a paved or gravel surface.

15. Failure to comply with these guidelines may cause serious injury or death.

Note!

Read and understand the Honda Motor owner's manual for safe and dependable engine operation before using this equipment.

I have read and fully understand all of the above.

Customer/Operator Signature: _____
Date: _____ / _____ / 20_____

9. Parts Breakdown

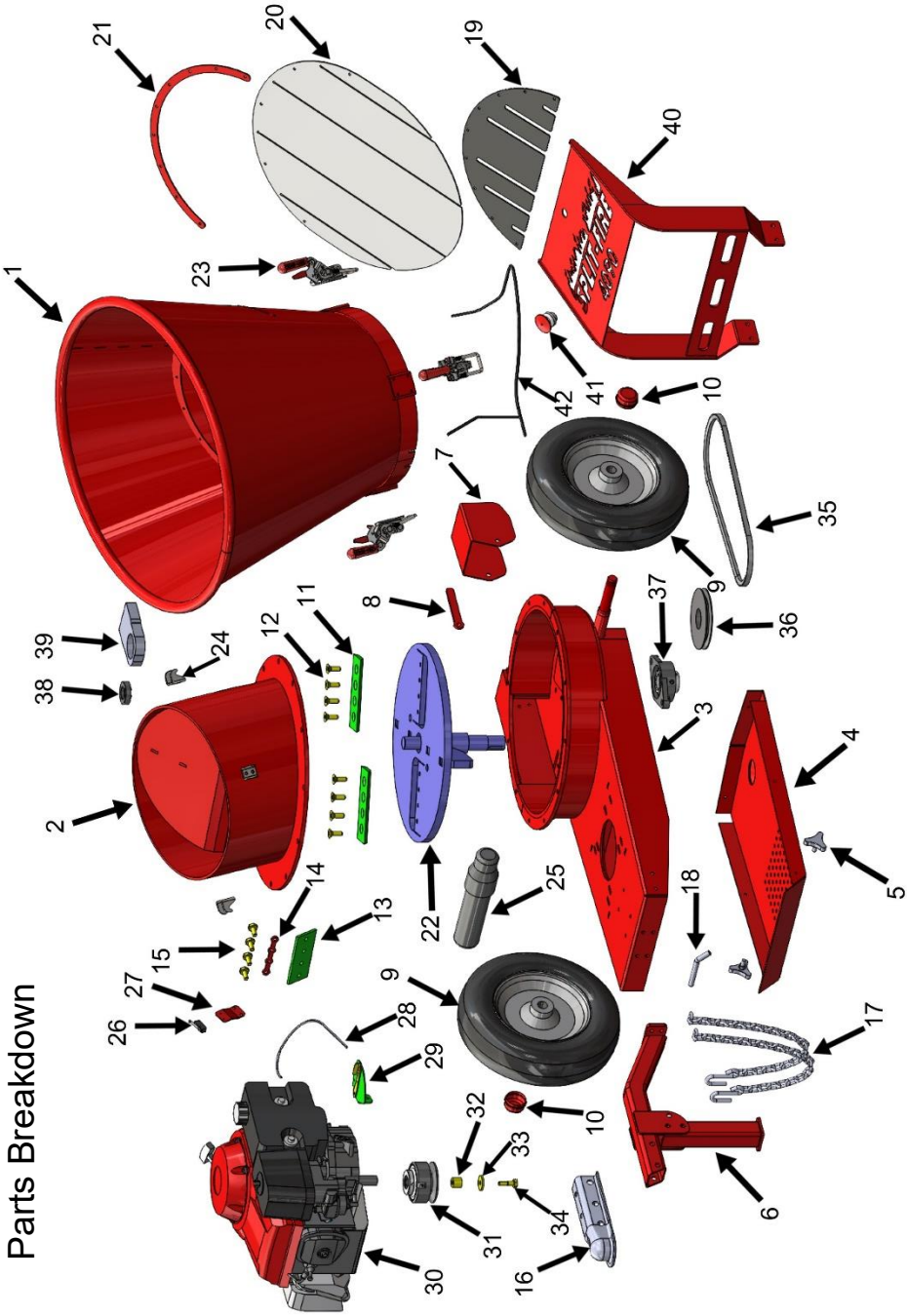

Item	Part Number	Description
1	SWP-IC49	Infeed Chute
2	SWP-TC49	Main Frame Top Cap
3	SWP-MF49	Main Frame
4	SWP-BG49	Belt Guard
5	SWP-WB	Wing Bolt
6	SWP-TS49	Tongue with Stand
7	SWP-OD49	Outfeed Deflector
8	SWP-OH49	Outfeed Deflector Handle
9	SLP-20TWA8	Wheel & Tire Assembly
10	SLP-HC-SCU	HT Hub Cap
11	SWP-CB	Blades - 2 x (7-1/4" x 2-3/4" X .421")
12	SWP-BB716C	Blade Bolts - 8 x (7/16"-20 x 1-1/4")
13	SWP-BB	Bed Blade / Anvil
14	SWP-BBW716	Bed Blade Washer
15	SWP-BBB716F	Bed Blade Bolts - 4 x (7/16"-24 x 1")
16	SLP-2BC-SCU	2" Ball Coupler
17	SLP-SC2-SCU	Safety Chains (Set of 2)
18	SLP-FSP-SC34	Front Stand Pin (with Cotter Pin)
19	SWP-KBSS	Kick Back Brace
20	SWP-KBPC	Kick Back Upper
21	SWP-KBW	Kick Back Washer

22	SWP-R2B49	Rotor
23	SWP-ILA	Infeed Latch
24	SWP-ILC	Infeed Latch Catch
25	SLP-PMC-U	Manual Canister
26	SWP-ICSA	Infeed Chute Switch
27	SWP-ICSB	Infeed Chute Switch Bracket
28	SWP-TC	Throttle Cable
29	SWP-TA	Throttle
30	SWP-MH	Motor (Honda GXV390)
31	SWP-C1B	Clutch 1" Bore
32	SWP-CS	Clutch Spacer
33	SWP-W716	Washer - 1 x (7/16")
34	SWP-CB716F	Clutch Bolt - 1 x (7/16"-24 x 1-1/2")
35	SWP-KVB	Kevlar V-Belt - (Refer to Info Plate)
36	SWP-P6	Pulley
37	SWP-2BFB	2 Bolt Lower Flange Bearing
38	SWP-UB	Upper Sealed bearing
39	SWP-UBH	Upper Bearing Housing
40	SWP-EG49	Engine Guard
41	SWP-ESB	E-Stop Button
42	SWP-ESC	E-Stop Circuit

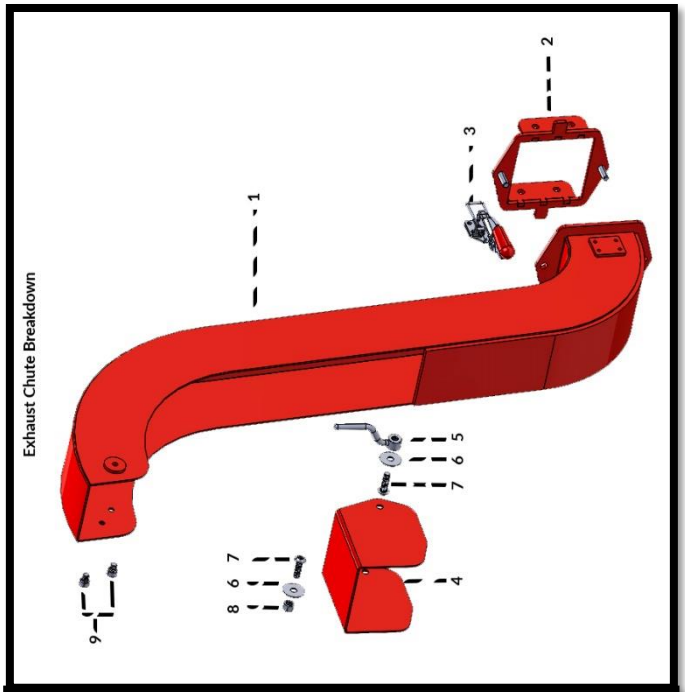
Exhaust Chute Breakdown
1
2
3
4
5
6
7
8
9

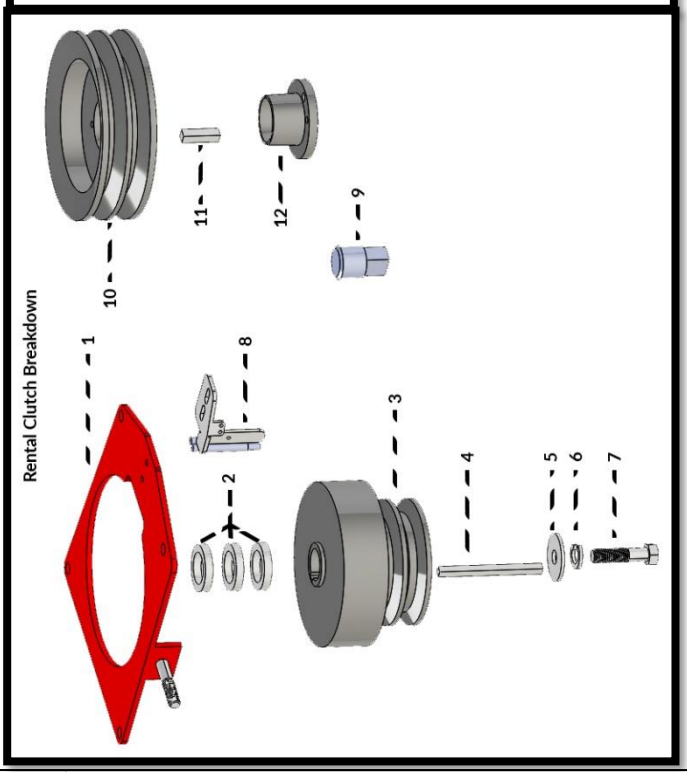
Rental Clutch Breakdown
1
2
3
4
5
6
7
8
9
10
11
12

Rental Clutch Breakdown		
Item	Part Number	Description
1	SWP-HDBT	Heavy Duty Clutch Belt Tensioner
2	SWP-HDCS	Heavy Duty Clutch Spacer
3	SWP-HDCL	Heavy Duty Clutch
4	SWP-HDCK	Heavy Duty Clutch Key (1/4” x ¼” x 3.325”)
5	SWP-SSW	Stainless Steel Washer (1-1/2” x .45” x .105”)
6	SWP-CLW	7/16” Lock Washer
7	SWP-CCB	Crankshaft Bolt (7/16”-20 X 1-3/4” Grade 5 Bolt)
8	SWP-HDHS	Heat Sensor Assembly
9	SWP-HDLB	Heat Sensor Lighted Switch
10	SWP-HDP	Heavy Duty Two-Belt Pulley
11	SWP-PK	Pulley Key (5/16” x 5/16” x 1-3/16”)
12	SWP-PB	Pulley Bushing

Exhaust Chute Breakdown		
Item	Part Number	Description
1	SWP-ECB	Exhaust Chute Main Body
2	SWP-CFB	Chipper Flange Bracket
3	SWP-ECL	Exhaust Chute Locking Latch
4	SWP-OD49	Outfeed Deflector
5	SWP-ECH	Exhaust Chute Deflector Handle
6	SWP-SSDW	Stainless Steel Deflector Washer
7	SWP-DBH	Button Head Deflector Bolt (2x3/8”-16 x 1-1/4”)
8	SWP-DNLN	Nylon Lock Nut (3/8”-16)
9	SWP-HCLS	Hex Cap Limiting Screw (2x 3/8”-16 x 3/8”)

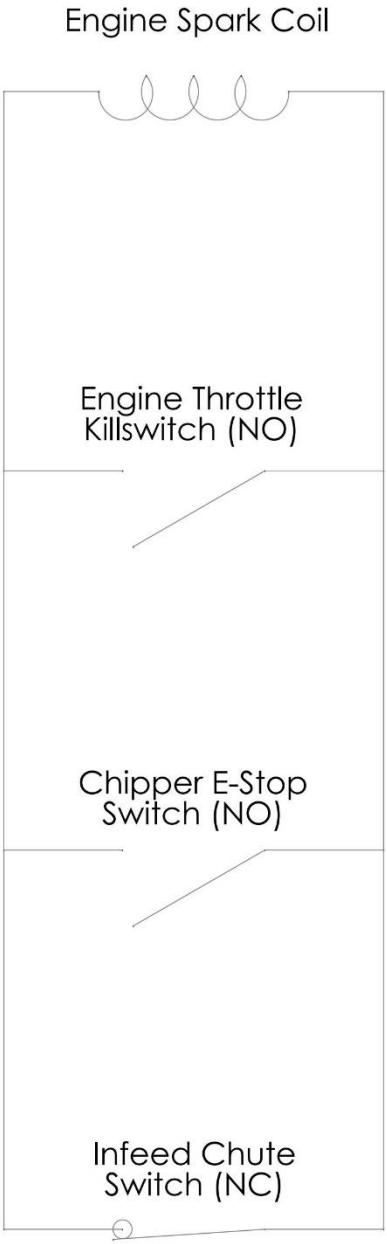
Engine Spark Coil
Engine Throttle Killswitch (NO)
Chipper E-Stop Switch (NO)
Infeed Chute Switch (NC)