SPLIT-FIRE®

Owners Manual

4000 Series

Self Contained

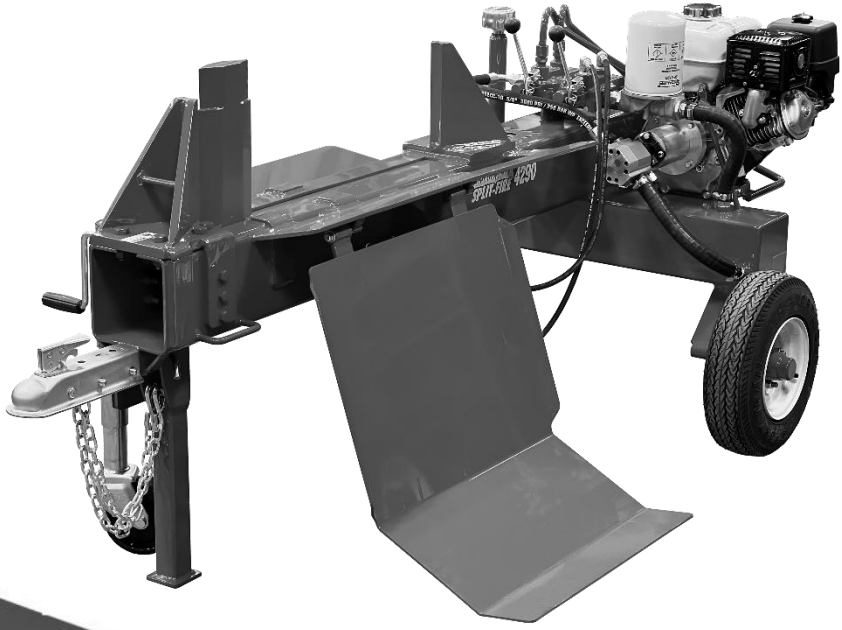

Thank You for Purchasing a Split-fire Log Splitter!

We appreciate having you as our customer and wish you many years of safe and satisfactory operation with your machine.

SPLIT-FIRE SALES INC.

135 Main St.
Norwich, ON N0J 1P0
Canada

1-877-548-3473 / 519-468-3647

Please share a google review about your Split-Fire experience

Table of Contents

1. Introduction 4
   1.1 How to use your Owner's Manual 4
   1.2 Product Identification 6
   1.3 Warranty 8
2. Safety 9
   2.1 Safety Labels 9
   2.2 Wood Handling Safety 12
   2.3 Operation Safety 13
   2.4 Worksite Safety 16
   2.5 Option Safety / Operation 18
      2.51 Log Lifter 18
3. Operation 20
   3.1 Before Operation 20
   3.2 Operation 22
   3.3 After Operation 23
4. Maintenance 24
   4.1 Engine Maintenance 24
   4.2 Log Splitter Maintenance 24
      4.21 Hydraulic system Specifications 24
      4.22 Hydraulic Oil Change Instructions 25
      4.23 Frame 27
      4.24 Tires, Lights & Hitch 28
5. Storage 30
6. Towing your Log Splitter 31
7. PARTS BREAKDOWN 34
8. Manual Checklist 36

1. Introduction

1.1 How to use your Owner's Manual

This owner's manual is a very important part of your new machine and should remain a permanent part of it. If the machine is sold, the operator's manual must go with it.

By reading the operator's manual you will help yourself and others avoid unnecessary personal injury and/or damage to the machine and will also allow you to perform maintenance to keep your machine operating properly. The information recorded in this manual will help you use this machine safely and effectively. Once you know how to operate the machine correctly and safely, you can train others to operate the machine as well.

If your machine has been ordered with any options or attachments, please refer to the option safety section of the individual operator's manual that is included with that specific accessory.

The machine that is used in this manual for illustration may differ slightly from your model. It will be similar enough to help you understand our instructions.

Throughout this manual the terms "Left Hand" and "Right Hand" will be used. These sides are determined when standing behind the engine and facing the knife or far stop of the machine. Also "Back" and "Front" will be used. On the self-contained log splitter, the "Back" is referred to the engine side and the hitch is the "Front". The hydraulic pump would be located on the back-left corner of the machine.

Your machine has been tested and inspected to pass quality control at Split-fire's Manufacturing facility to ensure good performance prior to leaving the factory.

While reading the manual, important messages are used to bring the operator's attention where there may be safety concerns relating to machine damage and important servicing information. Please read all these messages to avoid personal injury and machine damage. The three main messages will start with:

WARNING!!!: which suggests, a strong chance of personal injury or death to the operator or bystanders if procedures are ignored.

IMPORTANT: which suggests, a strong chance of potential damage to the machine may occur if procedures are ignored.

NOTE: suggests to the operator, General information given to help the operator to operate or service the machine.

1.2 Product Identification

If you ever need to contact your dealer or the manufacturer for parts or questions regarding the operation or servicing of the machine, it is important to have the model number as well as all the necessary identification numbers. Using the sample pictures on page 7 you can find the necessary numbers to complete the spaces below.

Date of Purchase:

_____

Dealer Name:

_____

Dealer Phone Number:

_____

Frame Serial Number: (XX XX XX)

_____

Engine Serial Number (If equipped with engine): (XXXXXXX)

_____

Engine Serial Number

Frame Serial Number

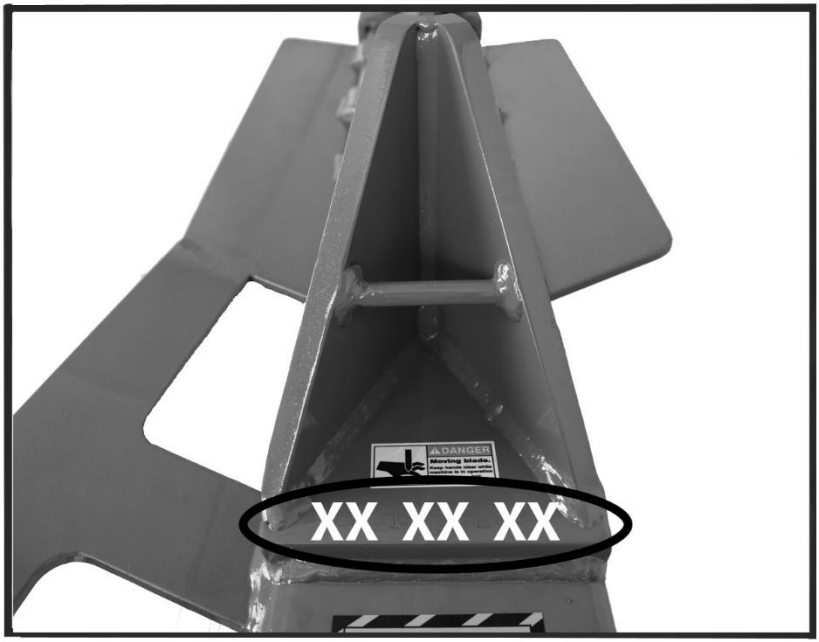

1.3 Warranty

Split-Fire Sales Inc. guarantees the original purchaser of any new Split-Fire machine, that the same is free of defects in workmanship or materials that may cause performance failure, subject to the condition's hereafter.

Split-fire must be contacted before the problem on the machine has been fixed. Split-fire will diagnose the problem and authorize any warranty work that will be allowed. If Split-fire does not authorize or parts are not sent from Split-Fire, warranty will not be applicable.

This guarantee is limited to a period of one year from the date of purchase. Replacement of any defective part is free of charge FOB Split-Fire Sales Inc. If Split-Fire requires the parts to be returned to Split-Fire, Split-Fire will pay for return shipping.

This guarantee does not apply to engines or other parts that are manufactured and guaranteed by the manufacturer thereof, nor does this apply with respect to any part or product that:

1. has original parts removed or otherwise altered without specific authorization beforehand from Split-Fire Sales Inc.
2. has had placed upon or attached to it, any part or product not sold or approved by Split-Fire Sales Inc.
3. has been damaged or is not used in conformity with the applicable instruction for the machine.
4. has not been properly adjusted or maintained by the owner.
5. has been adjusted or altered to increase the performance of the machine.

This guarantee is in lieu of, and excluded all other guarantees and conditions of merchantability and fitness for a purpose. Acceptance of a Split-Fire Sales product constitutes an agreement that Split-fire Sales shall have no liability for any special or consequential damage.

2. Safety

2.1 Safety Labels

The machine safety labels shown in the section below are very important. They are placed in areas on the machine that draw the attention of the operator to potential safety hazards on the machine. If at any time the stickers are removed, or come off, contact your dealer or the manufacturer immediately for replacement decals.

The operator's manual explains the potential safety hazards in detail associated to each decal. Special attention should be kept for these recommendations. They are outlined for your safety.

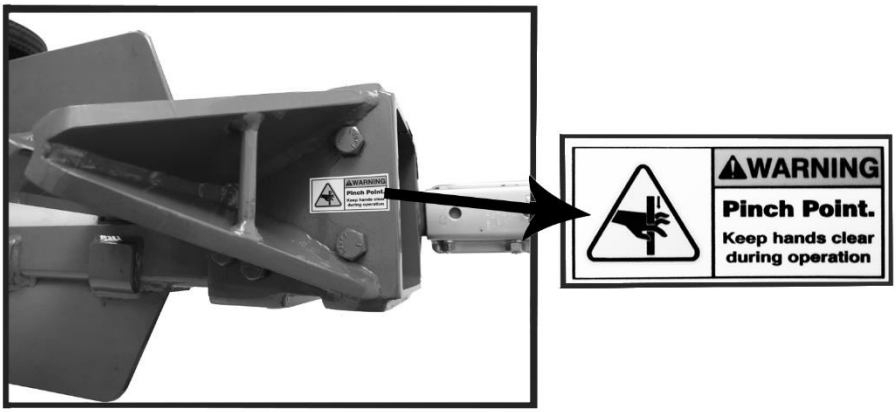

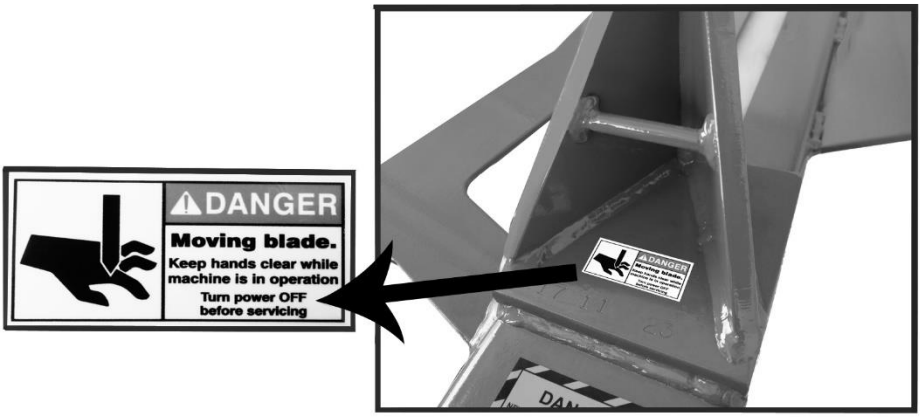

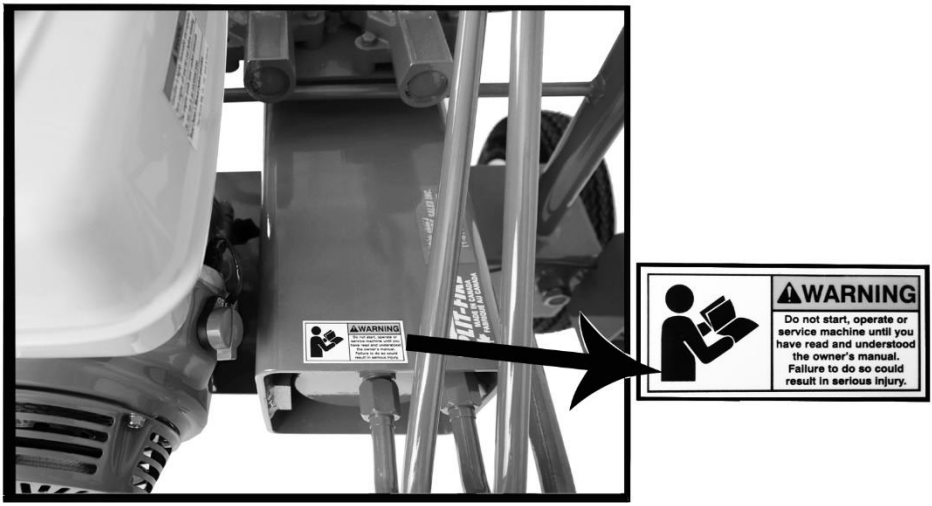
WARNING
Do not start, operate or service machine until you have read and understood the owner's manual. Failure to do so could result in serious injury.

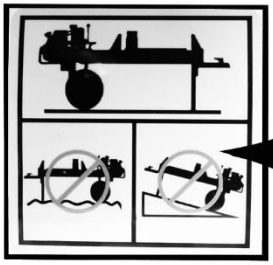

DANGER
Moving blade.
DANGER
NEVER! HANDLE WOOD BY THE SAWN ENDS!
BLOCKS SHOULD ALWAYS BE HELD ON THE BARK SIDES!
MANIPULER LE BOIS SUR LE COTE DE L'ECORCE SEULEMENT. NE JAMAIS MANIPULER LES BUCHES PAR LE BOUT QUI EST SCIE!
REMOVE HANDS IMMEDIATELY WHEN KNIFE CONTACTS WOOD!

DANGER
NEVER! HANDLE WOOD BY THE SAWN ENDS!
BLOCKS SHOULD ALWAYS BE HELD ON THE BARK SIDES!
MANIPULER LE BOIS SUR LE COTE DE L'ECORCE SEULEMENT. NE JAMAIS MANIPULER LES BUCHES PAR LE BOUT QUI EST SCIE!
REMOVE HANDS IMMEDIATELY WHEN KNIFE CONTACTS WOOD!
ENLEVER LES MAINS IMMEDIATEMENT QUAND LE COUTEAUX ENTRE EN CONTACTE AVEC LE BOIS!

CAUTION
HOT MUFFLER CAN BURN YOU.
Stay away if engine has been running.
WARNING
Gasoline is highly flammable and explosive.
Turn engine off and let cool before refueling.
The engine emits toxic carbon monoxide.
Do not run in an enclosed area.
Read Owner's Manual before operation.
Thai Honda Mfg. Co., Ltd. MADE IN THAILAND

2.2 Wood Handling Safety

WARNING!!! - NEVER HANDLE WOOD ON THE SAWN ENDS; BLOCKS SHOULD ALWAYS BE HELD BY THE BARK SIDES! HANDLING BLOCKS ON THE SAWN END INCREASES RISK FOR PERSONNEL INJURY

WARNING!!! - NEVER LIFT HEAVY/OVERSIZE LOGS BY YOURSELF. BAD POSTURE AND HEAVY LOGS MAY CAUSE SEROIUS INJURY. IF THE LOG IS TOO HEAVY GET ASSISTANCE OR UTILIZE A HYDRAULIC LOG LIFTER.

It is important to always wear proper PPE when operating your log splitter.

Gloves – Gloves must be worn at all times to reduce the risk of slivers, imbedded objects (Nails, Wire, etc) and contact with natural poisons, (Poison Ivy, Poison Oak)

Eye Protection – Eye protection must be worn to reduce the risk of eye injury from airborne objects.

Foot Protection – Foot Protection must always be worn to reduce the risk of foot injury from falling logs. When splitting, logs may slip when being lifted, or may fall off the splitting bed.

Hearing Protection – Hearing protection must be worn to reduce the risk of hearing loss. Engines are loud enough to cause risk of hearing loss when exposed over a long period of time.

2.3 Operation Safety

✓ Carefully read and understand all the instructions pertaining to the log splitter in the operator's manual before operating your new machine. Anyone who operates or services this machine must read the owner's manual first. If any doubt or question arises about the safe and/or correct method of performing anything in this manual, contact one of our representatives at our head-office.

✓ Avoid accidents by being alert and recognizing potential hazards. Not all possible circumstances can be anticipated in this manual. Keep your log splitter and work area safe for yourself and others. Proper care and safety is your responsibility.

NOTE: If your log splitter is equipped with a Honda engine or any other attachments, be sure to read those manuals.

Warning:

The engine exhaust from this product contains chemicals known to the State of California to cause cancer, birth defects and other reproductive harm.

✓ All operators must have the necessary training and skills to operate and the machine properly and safely. Use the controls correctly and follow the safety signs and recommendations.

✘ Never allow untrained persons to operate or service the equipment.

✘ Never let persons under the age of 18 operate the log splitter.

✓ The owner is responsible for accidents and injuries to themselves and/or other persons operating their machine. If others are permitted to use this machine it is the responsibility of the owner to train users.

✓ New users may operate this machine in a clear, unobstructed area under the supervision of an experienced operator, only after they have read and understand the owner's manual.

✓ Only allow responsible adults who are familiar with the instructions to operate this machine.

✓ Inspect your machine each time before use. Special attention should be taken that all guards are in place, damaged or missing parts are replaced, and that all the safety decals highlighted in the safety labels section are in place on the machine.

✓ Each time you operate your log splitter, ensure that the handle on the hydraulic valve returns to centre position. Move handle both ways and if it sticks, immediately call the dealer or manufacturer for replacement parts.

✓ Only one person may operate the machine at any time. More than one operator greatly increases the chance of personal injury or death.

✘ Never leave machine unattended while running.

✘ Never operate machine when under the influence of alcohol or drugs.

✘ Do not alter; add accessories, or attachments to your log splitter without the approval of the manufacturer. Doing any of the above without the manufacturer's approval WILL VOID THE WARRANTY. If attachments have been added with the approval of the manufacturer, be sure to keep safety labels visible.

✓ Your machine is designed to split wood only! Stones, metal, brush, gravel, and other foreign objects will cause damage to the machine and increase the chance of personal injury or death.

✘ It is not recommended to split wood across the grain. This may cause wood to explode out sideways and cause personal injury or death.

✓ Operate your machine in a smooth manner. Do Not jam the control handles back and forth in a uncontrolled motion. Always maintain control and operate the controls at an even steady pace.

2.4 Worksite Safety

✓ Keep area around the log splitter clear from tall grass, debris, tools, and wood chunks/bark at all times.

✓ Operate log splitter on level surface only.

✘ Do not operate your machine in enclosed areas. Your engine produces Carbon monoxide, which is extremely dangerous if used in enclosed area. (E.g. Garage, Workshop, Barn)

✘ Do not operate machine when distracted by others. Keep children and pets at least 25 feet away from the work area to protect them from possible injuries. Keep other distractions such as radio, television etc. away.

✓ Only use machine during daylight hours. Use of this machine without proper lighting can lead to personal injury or death.

✓ Protect yourself at all times while operating your machine. Safety glasses, Hand Protection, Steel-toed boots and Ear Protection must be worn at all times. Loose clothing is also not permitted around your machine.

✓ Keep hands and body parts clear of cutting blades and end stops at all times.

✘ Never handle wood on the sawn ends; blocks should always be carried by the bark sides.

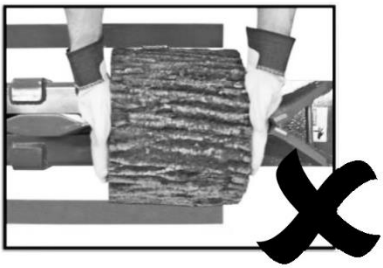

✘ Hands should not be lower than halfway down the sides of the block when splitting. If hands are lower and a log falls, fingers may get pinched between the log and the shelves.

✘ Do not transport this machine while the motor is running. This may cause permanent damage to your engine.

✓ Always disconnect the spark plug when the log splitter is not in use or is being serviced.

✓ If your machine is equipped with a log lifter, it is recommended that the operator stands on the right side of the machine and follows the wood up with their hand to stabilize the log and keep it from rolling off the bed. If the machine does not have a log lifter, the operator can stand either on the left or the right side.

2.5 Option Safety / Operation

2.51 Log Lifter

The hydraulic log lifter add-on is a great addition when splitting large oversize logs but must be operated with care. If installation is not completed by a Split-Fire technician, follow installation manual associated with the option.

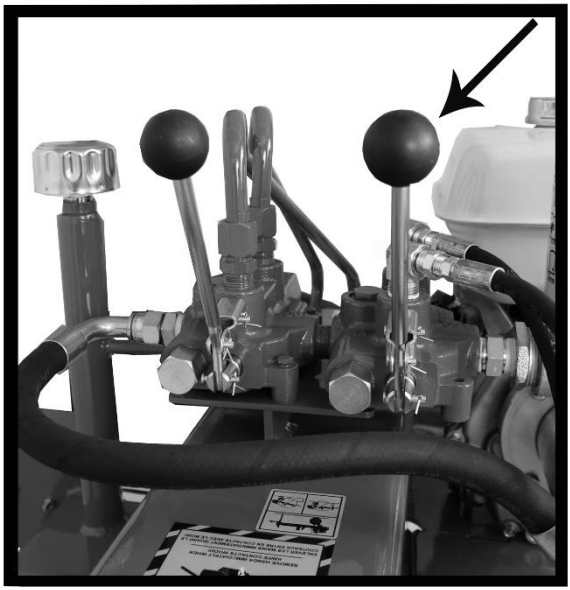

Log Lifter Safety

- Do NOT exceed 500lbs load capacity.
- Only operate the log splitter and lifter on a level surface.
- Operate the log lifter from the left side of the machine.,
- Ensure that the log lifter is clear of any obstacles, so it does not hit or get caught on tools or machinery.
- Keep people and pets at least 25 feet away from the Log Lifter during operation.
- Operate the Log Lifter smoothly. Do NOT jam the handle forward/reverse.

Log Lifter Operation

The log lifter is operated by the main valve but must have the selector valve in the Log Lifter Position for proper operation.

1. Set the selector valve in the Log Lifter position.
2. Gradually push/pull the handle and the Log Lifter will raise/fall into position.
3. Switch the selector valve into the log splitting position and splitting can resume.

3. Operation

3.1 Before Operation

Before operating your machine, inspect it to ensure it is in good working order.

1. It is important that you have read and understood all safety recommendations before operating the Log Splitter. Read both the Log Splitter and Engine owners manual before operating the machine.

2. Verify the hydraulic oil level is at the correct level on the oil sight glass. The oil level must be sitting between the top and half level of the sight glass.

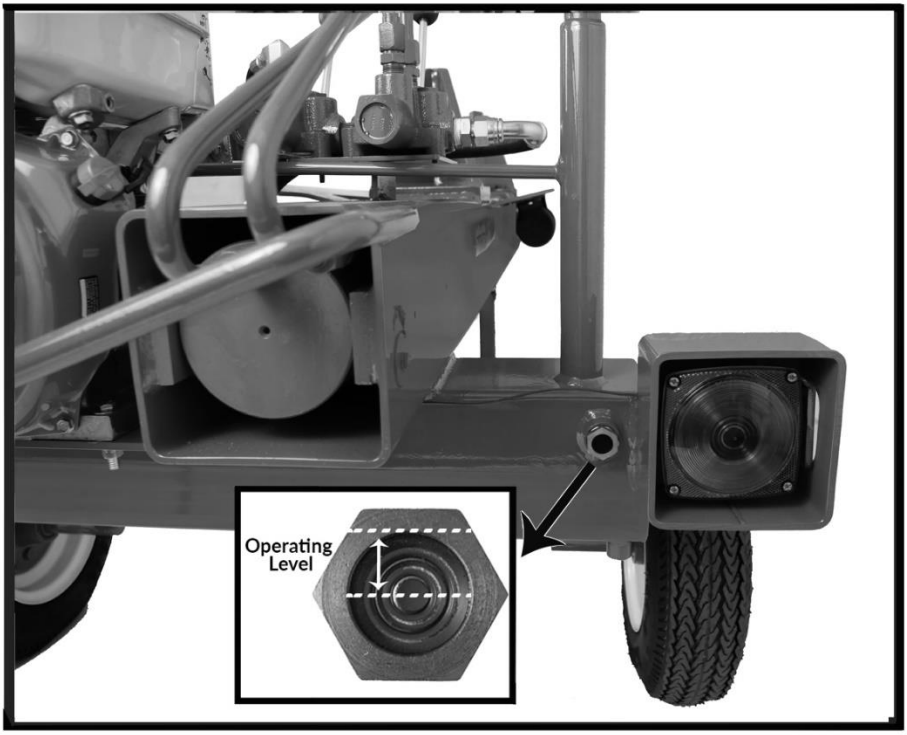

3. Verify the engine oil level is at the correct level on the oil dip stick. The oil level must be sitting between the indication grooves

4. Ensure that both tires are filled to the proper level with air. This can be visually confirmed, or double checked with an air pressure gauge. Tire pressure = 25 PSI
5. Be sure that the knife is free of burrs and dents. This can occur from splitting logs with embedded steel material. If the material has burrs or is dented, sand the knife to remove the dent and the burrs.
6. Check for any hydraulic leaks around the hydraulic valve, cylinder, filter and pump. If there are any leaks replace the faulty parts or reseal leaky fittings.
7. Verify that the log splitter is on level ground and the work area is clean and organized.
8. Once the before operation inspection has been completed the Log Splitter is ready for operation.

3.2 Operation

Once the before operation checklist has been completed, operation can begin:

1. The engine can be started. It is important to verify that the ON/OFF switch is in the ON position, the fuel is turned ON, as well as placing the choke in the ON position. (If the motor is warm the choke may not be needed.) Refer to the owners manual associated with the engine for specifics.

2. Once the engine has been started, allow the engine to warm up for 2-5 mins. Not only does it warm up the engine, it also warms up the hydraulic oil as it cycles the hydraulics.

3. While the Log Splitter is warming up, PPE can be put on (Ear, Eye, Foot, Hand protection is important for safety).

4. After the Log Splitter has warmed up, and PPE has been put on, the engine can be revved to half or full throttle. The machine does not need to operate at full throttle. Noise and fuel reduction can be achieved by lowering engine RPM's while only slightly lowering productivity.

Once splitting has been completed, follow the following steps:

1. The knife must be cycled to the rear stop position. This allows easy handling as the log splitter with balance in the upright position and will tow smoother with more weight over the axles.
2. The engine RPM can be lowered to an idle. Allow motor to idle for 15-30 seconds before turning off.
3. Turn off engine by switching ON/OFF switch to the OFF position.

3.3 After Operation

After splitting, steps can be completed to keep you machine in good operating status.

1. Once the Log Splitter has cooled off, the machine needs to be cleaned. Its important to clean inside the frame to remove wood debris. This can be most effectively done with air pressure via a blower, or a water pressure washer. A garden hose will also clean the frame. (Do NOT grease or oil slide pads after cleaning)
2. Give the log splitter a quick visual inspection. Check for loose fasteners, oil leaks, etc., and repair where needed.

If any unnecessary noise occurs stop operation immediately and check for damage. If nothing can be seen, contact a dealer to book an inspection. If there are no dealers in your area, contact Split-Fire Sales Inc.

4. Maintenance

Maintaining your machine is important and will ensure that the machine lasts year after year offering smooth and reliable operation.

4.1 Engine Maintenance

Read the engine specific owners manual associated with your log splitter. General engine maintenance includes some but not limited to the following;

- Oil Changes
- Air Filter Changes
- Spark Plug Changes
- Cleaning of Fuel System

When refueling your engine, it is important to refuel with high test fuel (Not E85). Small engines with start easier, operate smoother, and will last longer with high test fuel. High test fuel also lasts longer before decomposing, and any fuel that sits longer than 4 weeks is recommended to have fuel conditioner added for stability.

4.2 Log Splitter Maintenance

4.21 Hydraulic system Specifications

Oil Type	AW32 Hydraulic Oil (Anti-Foam if available)
Oil Capacity	Dry System – 22.75 L (6 gal) During Oil Change (Cylinder Full) – 16.5 L (4.4 gal)
Oil Capacity (High Flow)	Dry System – 75 L (19.8 gal) During Oil Change (Cylinder Full) – 68.75 L (18.2 gal)
Oil Change Frequency	First 50 hours from new production 150 hour regular intervals
Oil Filter Type	SF-6720 Spin-On Hydraulic Oil Filter (10 micron min.) Change oil filter every oil change
Oil Filter Type (High Flow)	SF-6720 Spin-On Hydraulic Oil Filter (10 micron min.) Change oil filter every oil change

4.22 Hydraulic Oil Change Instructions

1. Fully cycle the knife to the hitch end of the log splitter (away from the engine).
2. Remove the drain plug from the tank to empty the hydraulic reservoir. To ensure you have all of the oil out of the tank, remove the breather cap, and tilt the log splitter. Make sure to have a drain pan ready before removing the plug to collect and dispose of the oil properly.

3. If changing the filter, remove the filter over a drain pan. Make sure to allow all of the oil drain from the system. Apply a small amount of oil to the filter O-ring and install the new filter. Spin the filter on until it contacts the filter base, then tighten 3/4 to 1 turn.

4. Once fully drained, re-tape the drain plug fitting with 3 turns of teflon tape, and replace the drain plug.
5. Fill the reservoir so that the oil is 1/2 way into the sight-glass. This may not be the full volume specified on the previous page, that amount is just an approximation to help know the amount to purchase.
6. Start the log splitter and fully cycle the knife to both stops. Ensure that the oil is still 1/2 way into the sight glass with the knife at the hitch end of the log splitter.

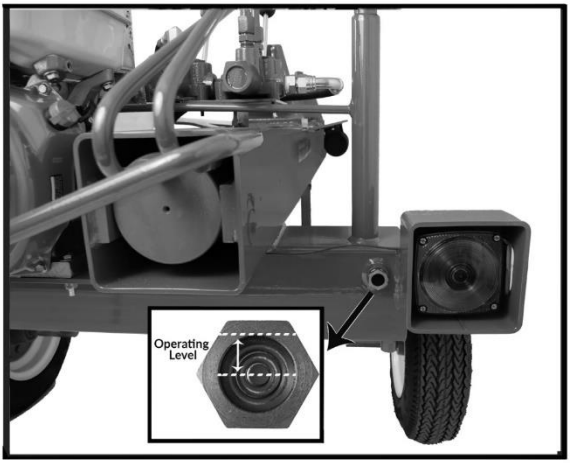

4.23 Frame

It is important to maintain your frame for smooth operation. Clean your machine, including inside the frame and the slider assembly. Debris may build up and cause damage during extreme neglect. It is best to clean frame with high pressure air or a pressure washing system.

Do NOT grease or oil the slide assembly. The UHMW slide pads are designed to operate without the addition of oil or grease. Oil and grease will attract dirt and debris particles and will drastically lower the life span of the slide pad.

Slide pad wear will occur over time and can be checked by slider "play". Slide can be checked by measuring the movement on the top of the knife. The "play" can be measured by completing the following steps.

1. Move the knife to the middle of the stoke. Equal distance between the front and back stop.
2. Utilize a rubber mallet hammer to hit the knife to the farthest left.
3. Use a flat edge (Ruler, Level, etc.) against the side of the frame in a vertical position to use as a measuring point.
4. Measure the distance between the flat edge and the top of the knife.
5. Utilize a rubber mallet hammer to hit the knife to the farthest right.
6. Place the flat edge in the same position and remeasure the distance between the flat edge and the knife.
7. If 3/8" "play" is observed, the slide pads need replacement.

Contact your local dealer or Split-Fire Sales Inc. for slide pad kit pricing and availability.

4.24 Tires, Lights & Hitch

Tires, Lights, and the Hitch must be inspected periodically for safety and reliability. This in-depth inspection must occur every 150 hours during hydraulic system maintenance.

Tires – must be inflated properly to 22-26 lbs of air pressure. If the tires are over inflated, dangerous bouncing may occur when towing.

Wheel bearing and tire straightness must also be inspected. Raise the axle and place on a block/raised surface. Verify that the wheel spins with ease and the rim runs straight and true. If any wheel “play” is observed, the grease cap must be removed, and wheel nut be retightened to remove wheel “play”. If any broken or worn out parts are found, all parts can be found in the parts breakdown or by calling your local dealer or Split-Fire Sales Inc.

Lights - must be inspected for proper safe operation. This can be easily done by plugging the receptacle to a vehicle and turning on the 4-way hazard lights. If both lights flash brightly along with the vehicle, the lights are in safe working operation. If not, the circuit must be checked for breaks, and or parts be replaced. All parts can be found in the parts breakdown or by calling your local dealer or Split-Fire Sales Inc.

Hitch – must be inspected for tightness to ensure towing safety. This can be completed by attaching the hitch to a vehicle. Verify that the ball on the vehicle is a 2” compatible ball. Place the hitch on the ball and latch the hitch. Then check the hitch by lifting and moving the machine to check for hitch “play”. The hitch should fit snugly, and no hitch “play” should be observed. If hitch “play” is observed, the hitch nut must be tightened. Reference “Towing your Log Splitter” for more details.

5. Storage

When storing your log splitter special attention should be drawn to the areas listed below.

1-4 weeks storage

1. Clean your machine as listed in the “after operation” section.
2. Turn OFF the fuel control on the engine
3. Add fuel stabilizer to maintain fuel quality
4. Store Log Splitter in a dry, clean, and secure area.

   It is not uncommon for Split-fire Log Splitters to be stolen due to their value. Always store the machine in a secure area!!

5 + weeks storage

1. Clean your machine as listed in the “after operation” section.
2. Place the knife closest to the back of the machine. (This places the chrome cylinder rod in the cylinder and keeps it from getting dusty / rusty over long periods of time.
3. Add fuel stabilizer to maintain fuel quality and run engine for 5 minutes to fill carburetor with stabilized fuel.
4. Turn OFF the fuel control on the engine
5. Spray a light oil mist on paint-less areas such as the knife, stops and splitting bed, and inside the frame. This will prevent surface rust. (This oil must be washed off with a biodegradable solvent when the machine in placed back into service)
6. Store Log Splitter in a dry, clean, and secure area. If the machine is stored outside, tightly wrap the machine in a tarp to reduce moisture, and UV ray exposure.

   It is not uncommon for Split-fire Log Splitters to be stolen due to their value. Always store the machine in a secure area!!

6. Towing your Log Splitter

Take extra care when hooking up and towing your log splitter. Before towing, make sure your log splitter is in safe towing condition. Inspect the tires, bearings, lights, hitch, and safety chains. Make sure the hitch is attached securely and locked via a locking pin when attaching the log splitter to a vehicle.

The hitch coupler and hitch ball must fit snug when locked. Attach your log splitter to your vehicle with the hitch and safety chains. It is important that the safety chains cross under the hitch to prevent the hitch from dropping to the ground should the hitch disconnect. Chain hooks should have latches to prevent disconnecting. (Each chain has a breaking strength that equals or exceeds the gross weight of the log splitter.)

Towing a log splitter puts additional weight on your vehicle. Increase the space around your vehicle to drive and stop safely. When towing your log splitter, avoid potholes, curbs and all other obstacles. At high speeds, large sudden bumps may result in an overturned log splitter.

Do NOT exceed 85 km/h under any circumstance.

Posi-Lock Hitch Couple

Adjust coupler locking pressure on ball before use. Place handle in locked position with ball in coupler. Tighten locknut against tension spring so that coupler is not loose on ball. Correct adjustment will allow handle to be released with moderate pressure applied to handle. To open, pull up on coupler handle and rotate forward. Then place coupler on ball. When ball is completely nested in ball socket, rotate coupler handle backward until handle is in locked position. After towing for 50 miles, check coupler for tightness on the ball. Always check tightness before towing. Be sure coupler handle is in locked position.

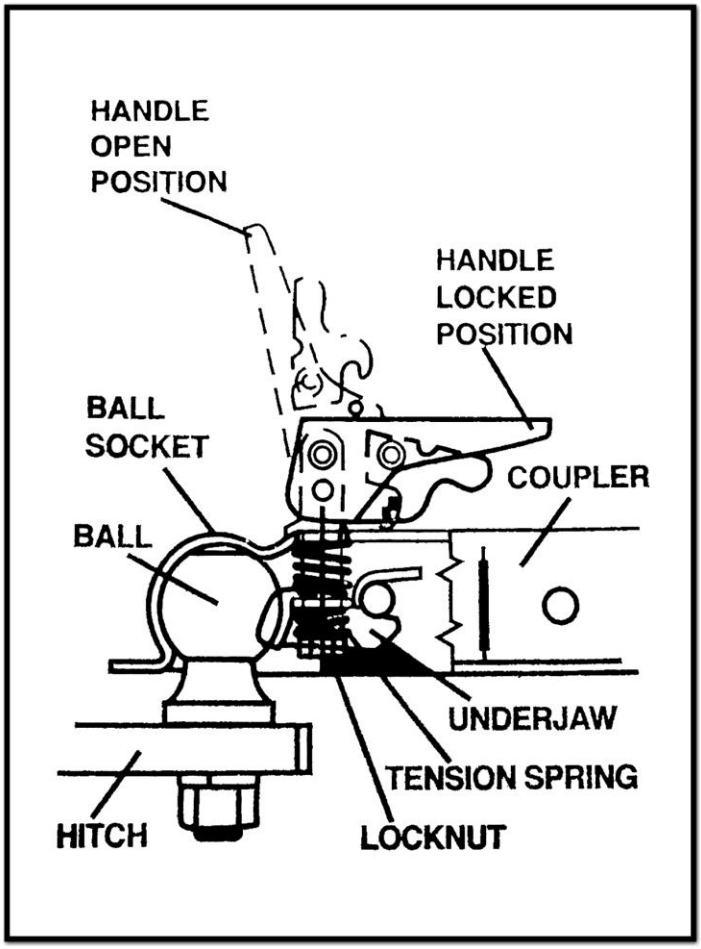

WARNING!!!

FAILURE TO OBEY THESE RULES CAN CAUSE TRAILER TO DETACH WHILE TOWING WHICH MAY CAUSE SERIOUS INJURY OR DEATH! NEVER EXCEED WEIGHT CAPACITY OF BALL OR LEAD LIMITS STAMPED ON COUPLER. ALWAYS USE SAFETY CHAINS PERSUANT TO INSTRUCTIONS OF TRAILER MANUFACTURER. ALWAYS USE CORRECT SIZE BALL SHOWN BY STAMP ON COUPLER. ALWAYS CHECK THAT BALL IS COMPLETELY INSERTED INTO COUPLER SOCKET AND THAT UNDERJAW IS SECURELY CLOSED AROUND THE BOTTOM OF BALL. ALWAYS CHECK THAT COUPLER HANDLE IS PROPERLY LOCKED BEFORE TOWING. ALWAYS EXAMINE COUPLER AND BALL FOR DAMAGE BEFORE TOWING. REPLACE IF DAMAGED. AVOID SHARP TURNS AND STEEP VERTICAL ANGLES WHEN TOWING WHICH MAY BEND OR DAMAGE COUPLER OR ITS COMPONENTS.

7. PARTS BREAKDOWN

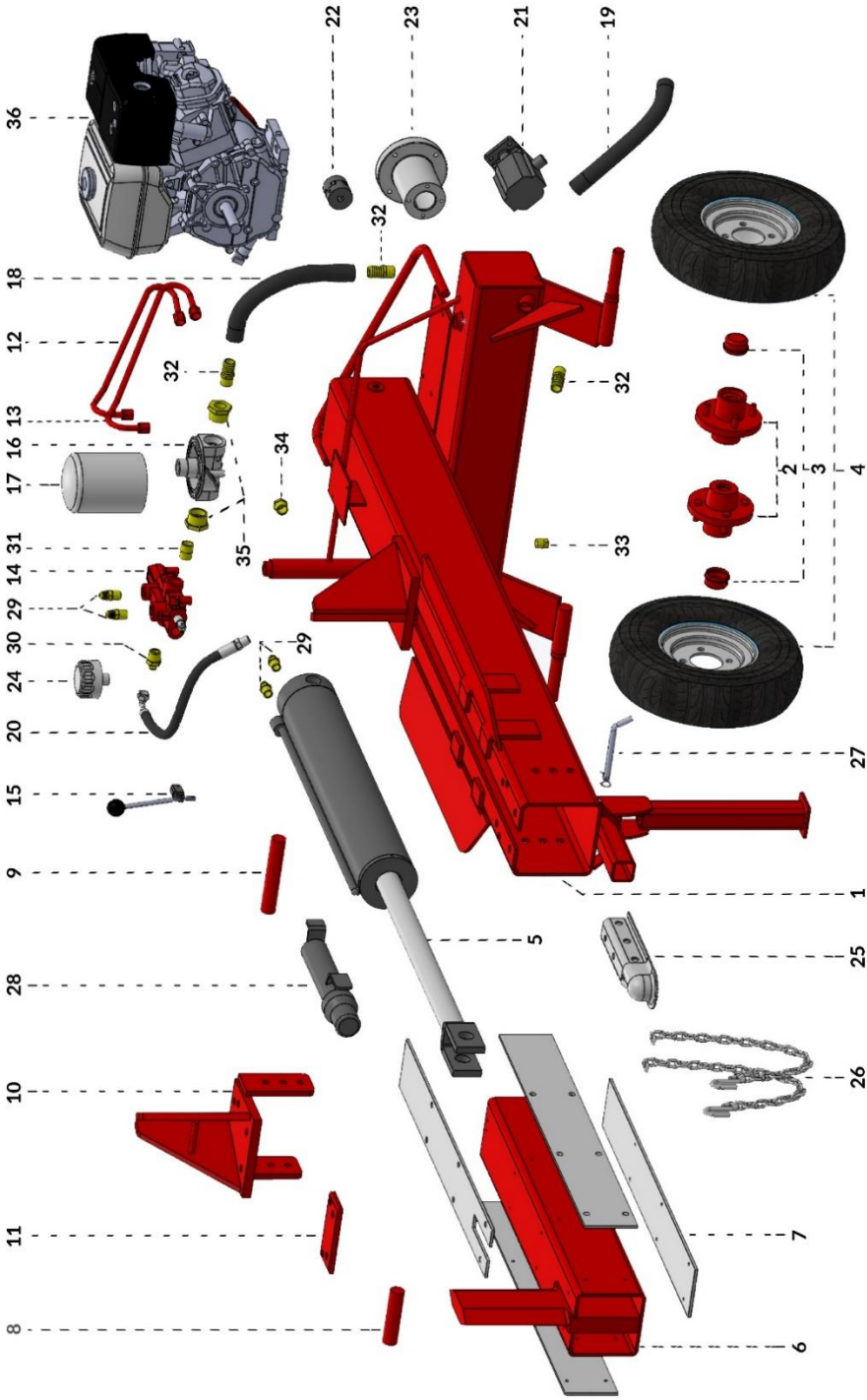

Item	Part Number	Description
1	SLP-4224FSC	Frame Assembly 4290
2	SLP-4BH-SCU	HT 4 Bolt Hub
3	SLP-HC-SCU	HT Hub Cap
4	SLP-4BWTA8	4 Bolt Wheel & Tire (480 x 8 Tire - 8 x 3.75 Wheel)
5	SLC-4024-C	4000 Series 24" Hydraulic Cylinder Assembly (Complete)
6	SLP-4024-SA	4000 Series 24" Slider Assembly
7	SLP-4024-SPK	4000 Series 24" Slide Pad Kit (4 Pads W/Screws)
8	SLP-SPCF-U4	4000 Series Slider Pin
9	SLP-CPB-U4	4000 Series Cylinder Back Pin
10	SLP-FS-U42	4000 Series Front Stop
11	SLP-FSP-U42	4000 Series Front Stop Plate
12	SLP-12HLS-U4	4000 Series 5/8" Steel Hydraulic Line - Short
13	SLP-12HLL-U4	4000 Series 5/8" Steel Hydraulic Line - Long
14	SLP-PHVA-U	Hydraulic Valve - Complete
15	SLP-PHVH-U	Hydraulic Valve Handle
16	SLP-FH-SC4	4000 Series Hydraulic Filter Head/Base
17	SLP-FE-SC4	4000 Series Hydraulic Filter Element
18	SLP-RH34-SC34	4000 Series Hydraulic Return Hose (1")
19	SLP-SH01-SC34	4000 Series Hydraulic Suction Hose (1")
20	SLP-HPH-SC4	4000 Series HP Hose 5/8" JICF x 1/2" NPTM
21	SLP-P11G-SC4	4000 Series Hydraulic Pump (16GPM)
22	SLP-MPC-SC4	4000 Series Motor - Pump Coupler
23	SLP-CH-SC4	4000 Series Coupler Housing
24	SLP-BCDS-SC34	Breather Cap
25	SLP-2BC-SCU	2" Ball Coupler
26	SLP-SC2-SCU	Safety Chains (set of 2)
27	SLP-FSP-SC34	Front Stand Pin (with Cotter Pin)
28	SLP-PMC-U	Manual Canister
29	SLP-F1258NJ	Fitting - 1/2" NPT Male x 5/8" JIC Male
30	SLP-F3458NJ	Fitting - 3/4" NPT Male x 5/8" JIC Male
31	SLP-F3434NN	Fitting - 3/4" NPT Male x 3/4" NPT Male
32	SLP-F341NHB	Fitting - 3/4" NPT Male x 1" Hose Barb
33	SLP-F12NDP	Fitting - 1/2" NPT Male Drain Plug
34	SLP-F34NSG	Fitting - 3/4" NPT Male Sight Glass
35	SLP-F34114NN	Fitting - 3/4" NPT Female x 1-1/4" NPT Male
36	SLP-MHG27-SC	Motor - Honda GX270

8. Manual Checklist

1. Each person that operates this Split-fire log splitter must read and understand this checklist and the rest of the owner's manual before operation.

2. Handle wood on the bark side only. Never pick up or handle logs by the sawn ends. Handling logs by the sawn ends may result in injury and/or death.

3. Keep hands at least 6 inches away from the stops and the knife at all times.

4. Always wear ear, eye, hand, and foot protection when operating the log splitter. Never wear loose clothing.

5. Do not tamper with engine RPM or pressure settings as the oil may overheat and cause leakage. This may result in reduced splitting power and could cause damage to the log splitter.

6. Keep the working area around the log splitter organized and free of equipment, tools, wood, and debris. Not doing so could result in injury or death.

7. Do not lift logs that are beyond your lifting capability. To reduce strain and/or injury, flip up the log splitter stand and lower the hitch to the ground. Roll the log onto the log splitter using the lower corner of the shelf as a lever.

8. Before towing the log splitter, make sure the hitch and safety chains are securely fastened (remember to cross the safety chains). Do not tow with the engine running and close the fuel shutoff lever on the engine prior to towing.

9. Take frequent breaks when using the log splitter. Stress and fatigue can result in injury and/or death. Be awake and alert at all times.

I have read and fully understand all of the above.
Customer/Operator Signature: _____
Date: _____ / _____ / 20_____