SPLIT-FIRE

Owners Manual

2000, 3000 & 4000 Series
3-Point Hitch

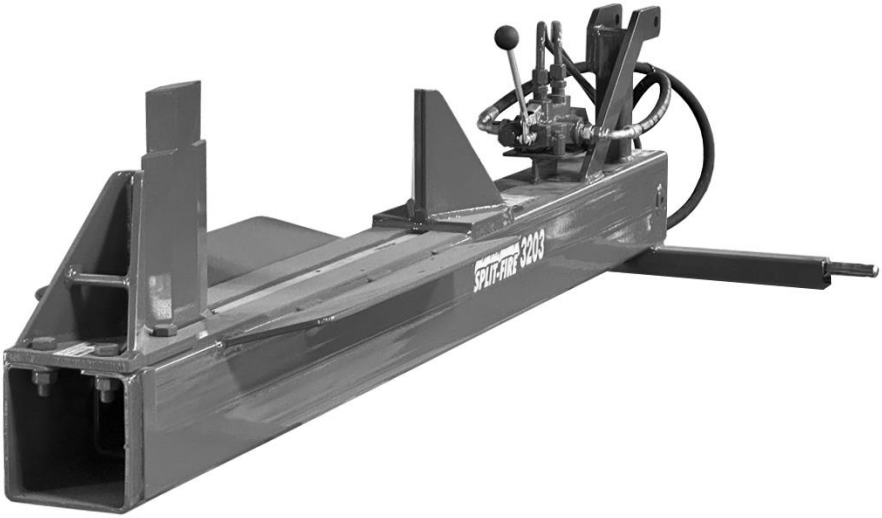

Thank You for Purchasing a Split-fire Log Splitter!

We appreciate having you as our customer and wish you many years of safe and satisfactory operation with your machine.

SPLIT-FIRE SALES INC.

135 Main St.
Norwich, ON N0J 1P0
Canada

1-877-548-3473 / 519-468-3647

Please share a google review about your Split-Fire experience

Table of Contents

1. Introduction 4

1.1 How to use your Owner's Manual 4

1.2 Product Identification 6

1.3 Warranty 7

2. Safety 8

2.1 Safety Labels 8

2.2 Wood Handling Safety 10

2.3 Operation Safety 11

2.4 Worksite Safety 14

2.5 Option Safety / Operation 16

2.51 Log Lifter 16

3. Operation 18

3.1 Before Operation and 3 Point Connection 18

3.15 PTO Kit Log Splitter Connection 20

3.2 Operation 24

3.3 After Operation and 3 Point Disconnection 25

4. Maintenance 26

4.1 Log Splitter Maintenance 26

4.11 Frame 26

4.12 Valve 27

4.13 PTO Kit Hydraulic System Specifications 28

4.14 PTO Kit Hydraulic Oil Change 28

5. Storage 30

5.1 How to Store your Log Splitter 30

5.2 How to Assemble your Storage Stand 31

6. Parts Breakdown 34

7. Troubleshooting 36

8. Manual Checklist 38

1. Introduction

1.1 How to use your Owner's Manual

This owner's manual is a very important part of your new machine and should remain a permanent part of it. If the machine is sold, the owner's manual must go with it.

By reading the operator's manual you will help yourself and others avoid unnecessary personal injury and/or damage to the machine and will also allow you to perform maintenance to keep your machine operating properly. The information recorded in this manual will help you use this machine safely and effectively. Once you know how to operate the machine correctly and safely, you can train others to operate the machine as well.

If your machine has been ordered with any options or attachments, please refer to the option safety section of the individual operator's manual that is included with that specific accessory.

The machine that is used in this manual for illustration may differ slightly from your model. It will be similar enough to help you understand our instructions.

Throughout this manual the terms "Left Hand" and "Right Hand" will be used. These sides are determined when sitting on the tractor facing the knife or far stop of the machine. Also "Back" and "Front" will be used. On the three-point hitch log splitters, the "Back" refers to the 3 PT hitch end and the log stop is at the "Front".

Your machine has been tested and inspected to pass quality control at Split-fire's Manufacturing facility to ensure good performance prior to leaving the factory.

While reading the manual, important messages are used to bring the operator's attention where there may be safety concerns relating to machine damage and important servicing information. Please read all these messages to avoid personal injury and machine damage. The three main messages will start with:

WARNING!!!: which suggests, a strong chance of personal injury or death to the operator or bystanders if procedures are ignored.

IMPORTANT: which suggests, a strong chance of potential damage to the machine may occur if procedures are ignored.

NOTE: suggests to the operator, General information given to help the operator to operate or service the machine.

1.2 Product Identification

If you ever need to contact your dealer or the manufacturer for parts or questions regarding the operation or servicing of the machine, it is important to have the model number as well as all the necessary identification numbers. Using the sample picture below you can find the necessary numbers to complete the spaces below.

Date of Purchase:

_____

Dealer Name:

_____

Dealer Phone Number:

_____

Frame Serial Number: (XX XX XX)

_____

Frame Serial Number

1.3 Warranty

Split-Fire Sales Inc. guarantees the original purchaser of any new Split-Fire machine, that the same is free of defects in workmanship or materials that may cause performance failure, subject to the condition's hereafter.

Split-fire must be contacted before the problem on the machine has been fixed. Split-fire will diagnose the problem and authorize any warranty work that will be allowed. If Split-fire does not authorize or parts are not sent from Split-Fire, warranty will not be applicable.

This guarantee is limited to a period of one year from the date of purchase. Replacement of any defective part is free of charge FOB Split-Fire Sales Inc. If Split-Fire requires the parts to be returned to Split-Fire, Split-Fire will pay for return shipping.

This guarantee does not apply to engines or other parts that are manufactured and guaranteed by the manufacturer thereof, nor does this apply with respect to any part or product that:

1. has original parts removed or otherwise altered without specific authorization beforehand from Split-Fire Sales Inc.
2. has had placed upon or attached to it, any part or product not sold or approved by Split-Fire Sales Inc.
3. has been damaged or is not used in conformity with the applicable instruction for the machine.
4. has not been properly adjusted or maintained by the owner.
5. has been adjusted or altered to increase the performance of the machine.

This guarantee is in lieu of, and excluded all other guarantees and conditions of merchantability and fitness for a purpose. Acceptance of a Split-Fire Sales product constitutes an agreement that Split-fire Sales shall have no liability for any special or consequential damage.

2. Safety

2.1 Safety Labels

The machine safety labels shown in the section below are very important. They are placed in areas on the machine that draw the attention of the operator to potential safety hazards on the machine. If at any time the stickers are removed, or come off, contact your dealer or the manufacturer immediately for replacement decals.

The operator's manual explains the potential safety hazards in detail associated to each decal. Special attention should be kept for these recommendations. They are outlined for your safety.

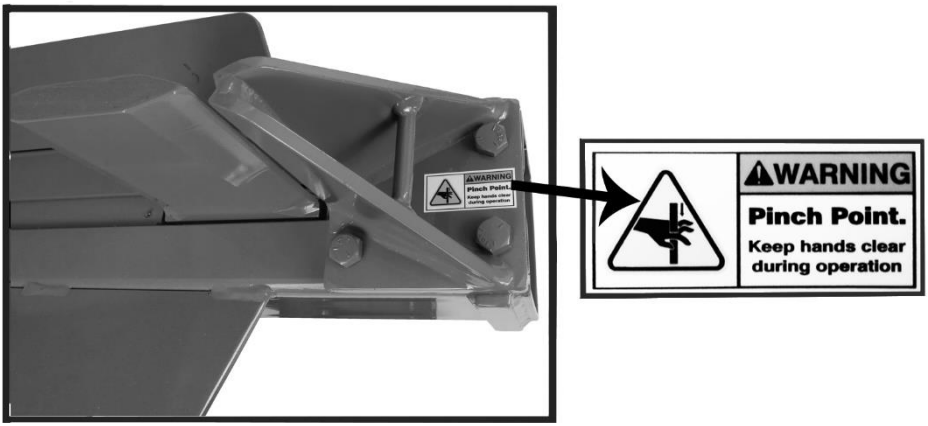

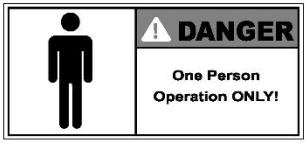
DANGER
One Person
Operation ONLY!

WARNING
Do not start, operate or service machine until you read and understand operator's manual
Failure to do so could result in serious injury.

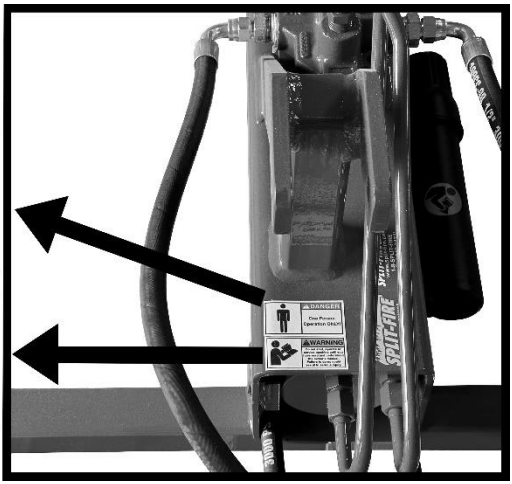
SPLIT-FIRE

DANGER
Moving blade.
DANGER
NEVER! HANDLE WOOD BY THE SAWN ENDS!
BLOCKS SHOULD ALWAYS BE HELD ON THE BARK SIDES!
MANIPULER LE BOIS SUR LE COTE DE L'ECORCE
SEULEMENT NE JAMAIS MANIPULER LES
BUCHES PAR LE BOUT QUI EST SCIE!
REMOVE HANDS IMMEDIATELY WHEN
KNIFE CONTACTS WOOD!
ENLEVER LES MAINS IMMEDIATEMENT QUAND LE
COUTEAUX ENTRE EN CONTACTE AVEC LE BOIS!

DANGER
NEVER! HANDLE WOOD BY THE SAWN ENDS!
BLOCKS SHOULD ALWAYS BE HELD ON THE BARK SIDES!
MANIPULER LE BOIS SUR LE COTE DE L'ECORCE
SEULEMENT NE JAMAIS MANIPULER LES
BUCHES PAR LE BOUT QUI EST SCIE!
REMOVE HANDS IMMEDIATELY WHEN
KNIFE CONTACTS WOOD!
ENLEVER LES MAINS IMMEDIATEMENT QUAND LE
COUTEAUX ENTRE EN CONTACTE AVEC LE BOIS!

2.2 Wood Handling Safety

WARNING!!! - NEVER HANDLE WOOD ON THE SAWN ENDS; BLOCKS SHOULD ALWAYS BE HELD BY THE BARK SIDES! HANDLING BLOCKS ON THE SAWN END INCREASES RISK FOR PERSONNEL INJURY

WARNING!!! - NEVER LIFT HEAVY/OVERSIZE LOGS BY YOURSELF. BAD POSTURE AND HEAVY LOGS MAY CAUSE SEROIUS INJURY. IF THE LOG IS TOO HEAVY GET ASSISTANCE OR UTILIZE A HYDRAULIC LOG LIFTER.

It is important to always wear proper PPE when operating your log splitter.

Gloves – Gloves must be worn at all times to reduce the risk of slivers, embedded objects (Nails, Wire, etc) and contact with natural poisons, (Poison Ivy, Poison Oak)

Eye Protection – Eye protection must be worn to reduce the risk of eye injury from airborne objects.

Foot Protection – Foot Protection must always be worn to reduce the risk of foot injury from falling logs. When splitting, logs may slip when being lifted, or may fall off the splitting bed.

Hearing Protection – Hearing protection must be worn to reduce the risk of hearing loss. Engines are loud enough to cause risk of hearing loss when exposed over a long period of time.

2.3 Operation Safety

✓ Carefully read and understand all the instructions pertaining to the log splitter in the operator's manual before operating your new machine. Anyone who operates or services this machine must read the owner's manual first. If any doubt or question arises about the safe and/or correct method of performing anything in this manual, contact one of our representatives at our head-office.

✓ Avoid accidents by being alert and recognizing potential hazards. Not all possible circumstances can be anticipated in this manual. Keep your log splitter and work area safe for yourself and others. Proper care and safety is your responsibility.

NOTE: If your log splitter is equipped with a Honda engine or any other attachments, be sure to read those manuals.

Warning:

The engine exhaust from this product contains chemicals known to the State of California to cause cancer, birth defects and other reproductive harm.

✓ All operators must have the necessary training and skills to operate the machine properly and safely. Use the controls correctly and follow the safety signs and recommendations.

✘ Never allow untrained persons to operate or service the equipment.

✘ Never let persons under the age of 18 operate the log splitter.

✓ The owner is responsible for accidents and injuries to themselves and/or other persons operating their machine. If others are permitted to use this machine it is the responsibility of the owner to train users.

✓ New users may operate this machine in a clear, unobstructed area under the supervision of an experienced operator, only after they have read and understand the owner's manual.

✓ Only allow responsible adults who are familiar with the instructions to operate this machine.

✓ Inspect your machine each time before use. Special attention should be taken that all guards are in place, damaged or missing parts are replaced, and that all the safety decals highlighted in the safety labels section are in place on the machine.

✓ Each time you operate your log splitter, ensure that the handle on the hydraulic valve returns to center position. Move handle both ways and if it sticks, immediately call the dealer or manufacturer for replacement parts.

✓ Only one person may operate the machine at any time. More than one operator greatly increases the chance of personal injury or death.

✘ Never leave machine unattended while running.

✘ Never operate machine when under the influence of alcohol or drugs.

✘ Do not alter; add accessories, or attachments to your log splitter without the approval of the manufacturer. Doing any of the above without the manufacturer's approval WILL VOID THE WARRANTY. If attachments have been added with the approval of the manufacturer, be sure to keep safety labels visible.

✓ Your machine is designed to split wood only! Stones, metal, brush, gravel, and other foreign objects will cause damage to the machine and increase the chance of personal injury or death.

✘ It is not recommended to split wood across the grain. This may cause wood to explode out sideways and cause personal injury or death.

✓ Operate your machine in a smooth manner. Do Not jam the control handles back and forth in a uncontrolled motion. Always maintain control and operate the controls at an even steady pace.

2.4 Worksite Safety

✓ Keep area around the log splitter clear from tall grass, debris, tools, and wood chunks/bark at all times.

✓ Operate log splitter on level surface only.

✘ Do not operate your machine in enclosed areas. Your engine produces Carbon monoxide, which is extremely dangerous if used in enclosed area. (E.g. Garage, Workshop, Barn)

✘ Do not operate machine when distracted by others. Keep children and pets at least 25 feet away from the work area to protect them from possible injuries. Keep other distractions such as radio, television etc. away.

✓ Only use machine during daylight hours. Use of this machine without proper lighting can lead to personal injury or death.

✓ Protect yourself at all times while operating your machine. Safety glasses, Hand Protection, Steel-toed boots and Ear Protection must be worn at all times. Loose clothing is also not permitted around your machine.

✓ Keep hands and body parts clear of cutting blades and end stops at all times.

✘ Never handle wood on the sawn ends; blocks should always be carried by the bark sides.

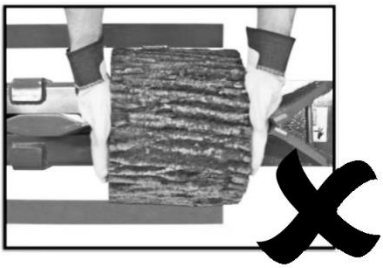

✘ Hands should not be lower than halfway down the sides of the block when splitting. If hands are lower and a log falls, fingers may get pinched between the log and the shelves.

✓ If your machine is equipped with a log lifter, it is recommended that the operator stands on the right side of the machine and follows the wood up with their hand to stabilize the log and keep it from rolling off the bed. If the machine does not have a log lifter, the operator can stand either on the left or the right side.

2.5 Option Safety / Operation

2.51 Log Lifter

The hydraulic log lifter add-on is a great addition when splitting large oversize logs but must be operated with care. If installation is not completed by a Split-Fire technician, follow installation manual associated with the option.

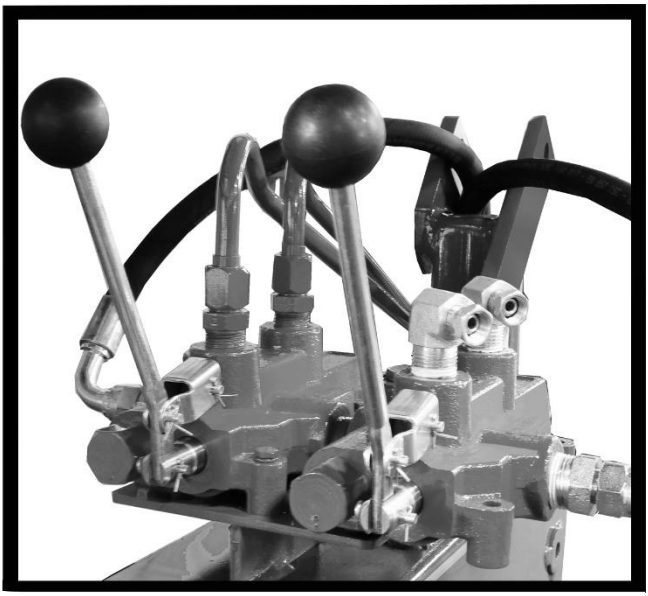

Log Lifter Safety

- Do NOT exceed 500lbs load capacity.
- Only operate the log splitter and lifter on a level surface.
- Operate the log lifter from the left side of the machine.,
- Ensure that the log lifter is clear of any obstacles, so it does not hit or get caught on tools or machinery.
- Keep people and pets at least 25 feet away from the Log Lifter during operation.
- Operate the Log Lifter smoothly. Do NOT jam the handle forward/reverse.

Log Lifter Operation

The log lifter is operated independently by the secondary valve adjacent to the main valve.

Gradually push/pull the handle and the log lifter will raise/fall into position.

NOTE!!!

If your log splitter is designed with a closed center hydraulic system, different log lifter valving will apply. If you are experiencing difficulties with proper log splitter and log lifter operation, contact Split-fire for details concerning this system.

3. Operation

3.1 Before Operation and 3 Point Connection

Before operating your machine, inspect it to ensure it is in good working order. If your log splitter is equipped with a PTO kit, please refer to section 3.15 below for connection instructions as the procedure varies from a Non-PTO equipped log splitter.

1. It is important that you have read and understood all safety recommendations before operating the log splitter. Read both the log splitter, and tractor owners manual before operating the machine.

2. Be sure that the knife is free of burrs and dents. This can occur from splitting logs with embedded steel material. If the material has burrs or is dented, sand the knife lightly to remove the dent and the burrs.

3. Bring the tractor to the splitter, lower the 3 PT hitch bars and slide the lower bars on the crossbar pins on the log splitter. Secure the 3 PT bars via linch pins.

4. Attach the top link via a top link bar. Adjust the top link bar so the log splitter is sitting in the level position. Secure the top link with ¾” pins and linch pins where needed.

5. Insert the hoses in the rear hydraulic remotes on the tractor. The 2 hoses should be inserted in the appropriate remotes as per the tractor owner's manual. If the owner's manual does not specify, contact a local dealer that represents your tractors' brand.

6. Check for any hydraulic leaks around the hydraulic valve, and cylinder. If there are any leaks replace the faulty parts or reseal leaky fittings.

7. Verify that the log splitter 3 PT connection is completed properly and is secure.

8. Once the "before operation inspection" has been completed, the Log Splitter is ready for operation.

3.15 PTO Kit Log Splitter Connection

Before operating your machine, inspect it to ensure that it is in good working order.

1. It is important that you have read and understood all safety recommendations before operating the Log Splitter. Read both the Log Splitter, and Tractor owners manual before operating the machine.

2. Be sure that the knife is free of burrs and dents, which can occur from splitting logs with embedded steel material. If the knife has burrs or is dented, file the knife lightly to remove any dents and/or burrs.

3. Attach the PTO shaft extender to the PTO pump using the supplied bolt, large washer, and lock washer. Ensure to slide the shaft extender into the pump so that the washer is installed on the same side as the hoses as shown below.

4. Bring rear of your tractor close enough to your log splitter so that the PTO pump can reach the PTO output on your tractor. If there is any guarding around the PTO output that will get in the way of the PTO pump or torque arm, flip out of the way, or remove the guarding. <u>ALWAYS</u> reinstall all guarding once the PTO pump has been removed.

5. Ensure that the 3 PT hitch arms can be spread wide enough to accommodate the log splitter crossbar. Access to anti-sway control bars may be blocked by the PTO pump once installed

6. Before installing the PTO pump on the tractor, take note of the arrow on the PTO pump. This indicates the direction that the PTO pump would spin if not held in place by the torque arm. Also observe the back of your tractor. Look for a strong structure that the torque arm on your PTO pump can rest against or be chained to while running. Do not mount the chain or torque arm between pinch points on your 3 PT Hitch. If you have questions regarding your PTO pump and torque arm positioning, contact Split-Fire service directly.

7. Place the PTO pump on the tractor. Do not connect the torque arm to your brace location until after the splitter is connected to the 3 PT linkage.

8. Back the tractor up to the splitter, lower the 3 PT hitch bars and slide the lower links onto the crossbar pins on the log splitter. Secure the lower link arms via linch pins.

9. Attach the top link to the 3 PT upright on the log splitter. Adjust the top link so that the log splitter is sitting level when at splitting height. Secure the top link with a ¾” pin and linch pin as required.

10. Ensure that the location that you planned to chain or rest the PTO pump torque arm against is still unobstructed. If it is obstructed find a new location to brace/chain to. Install your chain so that it is holding the torque arm isolated. Use a rag or piece of leather to keep the torque arm/chain from rubbing and removing the paint. The chain can be used to hold the torque, or to keep the torque arm against the brace point as shown below.

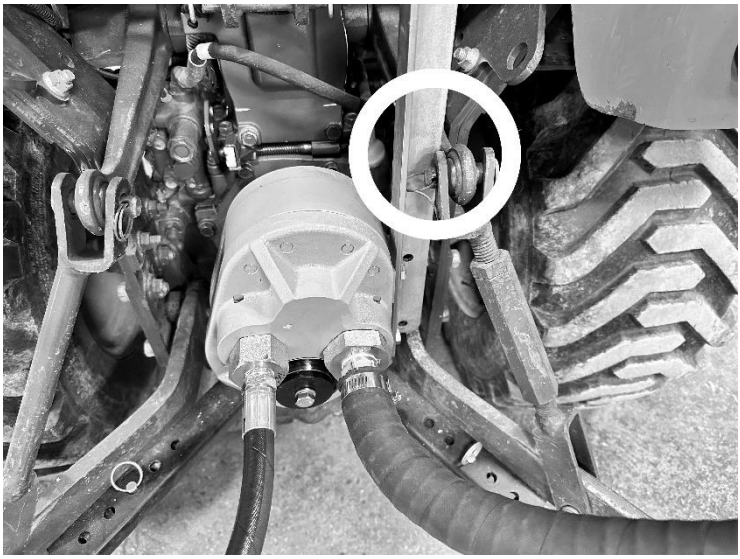

11. Check that the oil in the reservoir is full. You can now engage the PTO on your tractor and increase engine speed to your desired RPM. Be sure to keep the PTO speed at 540 RPM or less, more RPM = more flow. Flow only dictates stroke speed, not power.

12. If you move your three-point arms up or down, be careful that your PTO Pump and torque arm are not in contact with the 3 PT links. This may cause damage to your tractor or PTO pump.

13. Once the “before operation inspection” has been completed, the Log Splitter is ready for operation.

3.2 Operation

Once the “before operation checklist” has been completed, operation can begin:

1. Put on the appropriate PPE (Ear, Eye, Foot, Hand protection is important for safety).

2. The tractors hydraulics can be actuated to the on position. For more details reference your tractors owner’s manual. If the owner’s manual does not specify details, contact a local dealer that represents your tractors brand.

3. Increase the RPM’s on the tractor to the desired speed. The higher the RPM’s the higher the hydraulic flow. If fast cycle time is not required, the tractor can operate the log splitter at RPM’s just over an idle. If more speed is required, the tractor can operate at full RPM’s which will decrease log splitter cycle time.

4. Adjust the height of the 3 PT hitch arms to bring the log splitter to a comfortable working height.

5. The machine is now ready for operation. Run the log splitter smoothly. Do not jam or move the handle abruptly. Only handle logs on the bark side.

Once splitting has been completed, follow the following steps:

1. The tractors rpm can be lowered slowly.

2. Actuate the tractor hydraulics to the off position.

3.3 After Operation and 3 Point Disconnection

After splitting, steps can be completed to keep your machine in good operating status.

1. Once splitting is completed, the machine needs to be cleaned. Its important to clean inside the frame to remove wood debris. This can be most effectively done with air pressure via a blower, or a water pressure washer. A garden hose will also clean the frame. (Do NOT grease or oil slide pads after cleaning)
2. Give the log splitter a quick visual inspection. Check for loose fasteners, oil leaks, etc., and repair where needed.
3. Remove the hydraulic hoses from the rear remotes on the tractor.
4. Lower the 3 PT Hitch to ground level and remove the linch pins. Then remove the log splitter from the 3 PT hitch.
5. Tuck the 2 hoses into the end of the log splitter. This keeps them clean, rust free and out of the way of any damage that can occur.

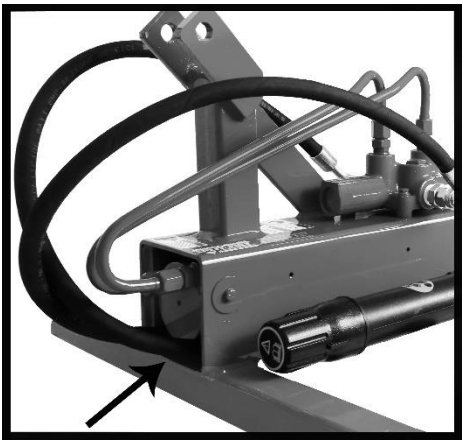

If any unnecessary noise occurs stop operation immediately and check for damage. If nothing can be seen, contact a dealer to book an inspection. If there are no dealers in your area, contact Split-Fire Sales Inc.

4. Maintenance

Maintaining your machine is important and will ensure that the machine lasts year after year offering smooth and reliable operation.

4.1 Log Splitter Maintenance

4.11 Frame

It is important to maintain your frame for smooth operation. Clean your machine, including inside the frame and the slider assembly. Debris may build up and cause damage during extreme neglect. It is best to clean frame with high pressure air or a pressure washing system.

Do NOT grease or oil the slide assembly. The UHMW slide pads are designed to operate without the addition of oil or grease. Oil and grease will attract dirt and debris particles and will drastically lower the life span of the slide pad.

Slide pad wear will occur over time and can be checked by slider "play". The slider can be checked by measuring the movement on the top of the knife. This can be done by completing the following steps.

1. Move the knife to the middle of the stroke. Equal distance between the front and back stop.
2. Utilize a rubber mallet to hit the knife to the farthest left.
3. Use a flat edge (Ruler, Level, etc.) against the side of the frame in a vertical position to use as a measuring point.
4. Measure the distance between the flat edge and the top of the knife.
5. Utilize a rubber mallet hammer to hit the knife to the farthest right.
6. Place the flat edge in the same position and remeasure the distance between the flat edge and the knife.
7. If 3/8" of "play" is observed, the slide pads need replacement.

Contact your local dealer or Split-Fire Sales Inc. for slide pad kit pricing and availability.

4.12 Valve

Your 3 PT hitch log splitter has been supplied with a prince log splitter valve. These valves have been setup for open center operation. Tractors are designed with either an open center or closed center hydraulic system. If your tractor has a closed center system, your valve needs to be setup for this system. A simple 3/8” NPT plug, (shipped with every machine) must be inserted in the outlet port of the valve. See image for more details. For any questions, call your local dealer or Split-fire.

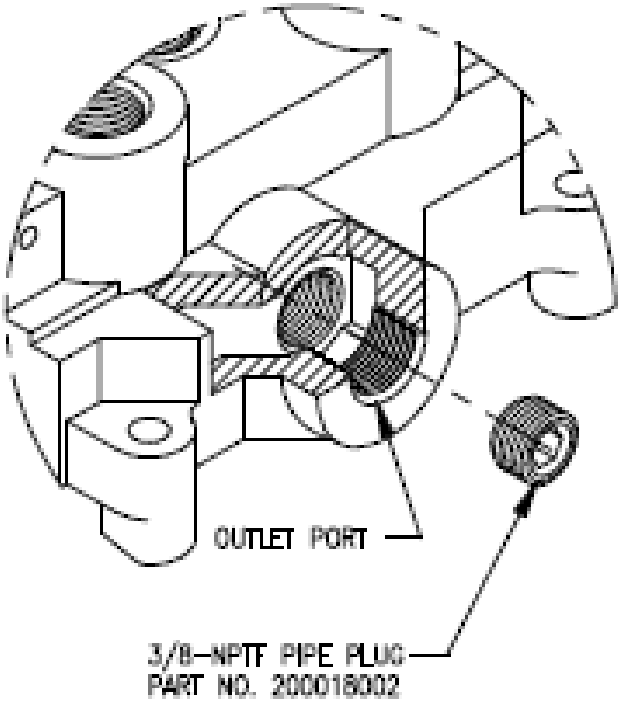

4.13 PTO Kit Hydraulic System Specifications

Oil Type	AW32 Hydraulic Oil (Anti-Foam if available)
Oil Capacity (18” Tank)	Dry System - 17.5 L (4.6 gal) During Oil Change (Cylinder Full) – 15.5 L (4.1 gal)
Oil Capacity (24” Tank)	Dry System – 24.5 L (6.5 gal) During Oil Change (Cylinder Full) – 22.5 L (6 gal)
Oil Change Frequency	First 50 hours from new production 150 hour regular intervals
Oil Filter Type (18” Tank)	SF-6520 Spin-On Hydraulic Oil Filter (10 micron min.) Change oil filter every oil change
Oil Filter Type (24” Tank)	SF-6720 Spin-On Hydraulic Oil Filter (10 micron min.) Change oil filter every oil change

4.14 PTO Kit Hydraulic Oil Change

1. Fully cycle the knife to the end opposite of the tractor.
2. Remove the drain plug from the tank to empty the hydraulic reservoir. To ensure you have all of the oil out of the tank, remove the breather cap. Make sure to have a drain pan ready before removing the plug to collect and dispose of the oil properly.
3. If changing the filter, remove the filter over a drain pan. Make sure to allow all of the oil drain to from the system. Apply a small amount of oil to the filter O-ring and install the new filter. Spin the filter on until it contacts the filter base, then tighten 3/4 to 1 turn.
4. Once fully drained, re-tape the drain plug fitting with 3 turns of teflon tape, and replace the drain plug.
5. Fill the reservoir so that the oil is 1/2 way into the sight-glass. This may not be the full volume specified above, that amount is just an approximation to help know the amount to purchase.
6. Start your tractor and fully cycle the knife to both stops. Ensure that the oil is still 1/2 way into the sight glass with the knife at the opposite end to the tractor.

5. Storage

5.1 How to Store your Log Splitter

When storing your log splitter special attention should be drawn to the areas listed below.

1-4 weeks storage

1. Clean your machine as listed in the “after operation” section.
2. Store Log Splitter in a dry, clean, and secure area.

   It is not uncommon for Split-fire Log Splitters to be stolen due to their value. Always store the machine in a secure area!!

5 + weeks storage

1. Clean your machine as listed in the “after operation” section.
2. Place the knife closest to the back of the machine. (This places the chrome cylinder rod in the cylinder and keeps it from getting dusty / rusty over long periods of time.
3. Spray a light oil mist on paint-less areas such as the knife, stops and splitting bed, and inside the frame. This will prevent surface rust. (This oil must be washed off with a biodegradable solvent when the machine in placed back into service)
4. Store Log Splitter in a dry, clean, and secure area. If the machine is stored outside, tightly wrap the machine in a tarp to reduce moisture, and UV ray exposure.

   It is not uncommon for Split-fire Log Splitters to be stolen due to their value. Always store the machine in a secure area!!

5.2 How to Assemble your Storage Stand

If your log splitter is equipped with a PTO kit, go to the next page for instructions to assemble your storage stand.

1) Complete the following instructions on a flat surface.

1) Rotate the center section so that the open side is facing down.

2) Install the first end plate with the feet facing the center of the stand and loosely thread the included ½”-13 X 7/8” Bolts with lock washers through the center section, into the end plate.

3) Install the second end plate the same way as the first.

4) Ensure that all four feet are firmly touching the ground then tighten the six bolts using a 3/4” wrench or impact driver and ¾” Socket.

If your log splitter is equipped with a four-way knife, your stand will come with a knife holder. This can be bolted to either side of the center section of the stand using the included hardware and used to hold knife that is not on the stub.

Storing your Log Splitter

If your log splitter is equipped with a PTO Kit, your stand will have come with two extra components, and extra fasteners. This is a stabilizer bar for the offset weight of PTO Kit log splitters. The following instructions should be followed to assemble the stabilizer bar onto the stand.

2) Complete the following instructions on a flat and level surface.

3) Rotate the center section so that the open side is facing down.

4) Install the first end plate with the feet facing the center of the stand and loosely thread the included ½”-13 X 7/8” Bolts with lock washers through the center section, into the end plate.

5) Install the second end plate the same way as the first, this time using the ½”-13 x 1-3/4” Long Bolts

6) Ensure that all four feet are firmly touching the ground then tighten the six bolts using a 3/4” wrench or impact driver and ¾” Socket.

7) Attach the bar with the three-bolt flange over the protruding bolts described in Step 4 using the included nuts and lock washers.

8) The crossbar support is asymmetric to match the offset of the crossbar on your log splitter. When facing the end plate of the stand, the bar must be attached with the long end of the tube to the left using the ½”-13 x 2-3/4” bolts, with nuts and lock washers.

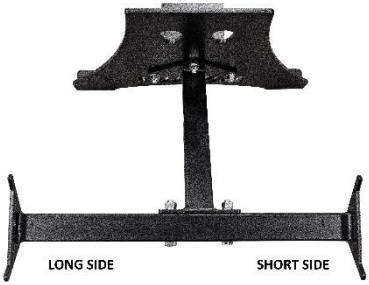

6. Parts Breakdown

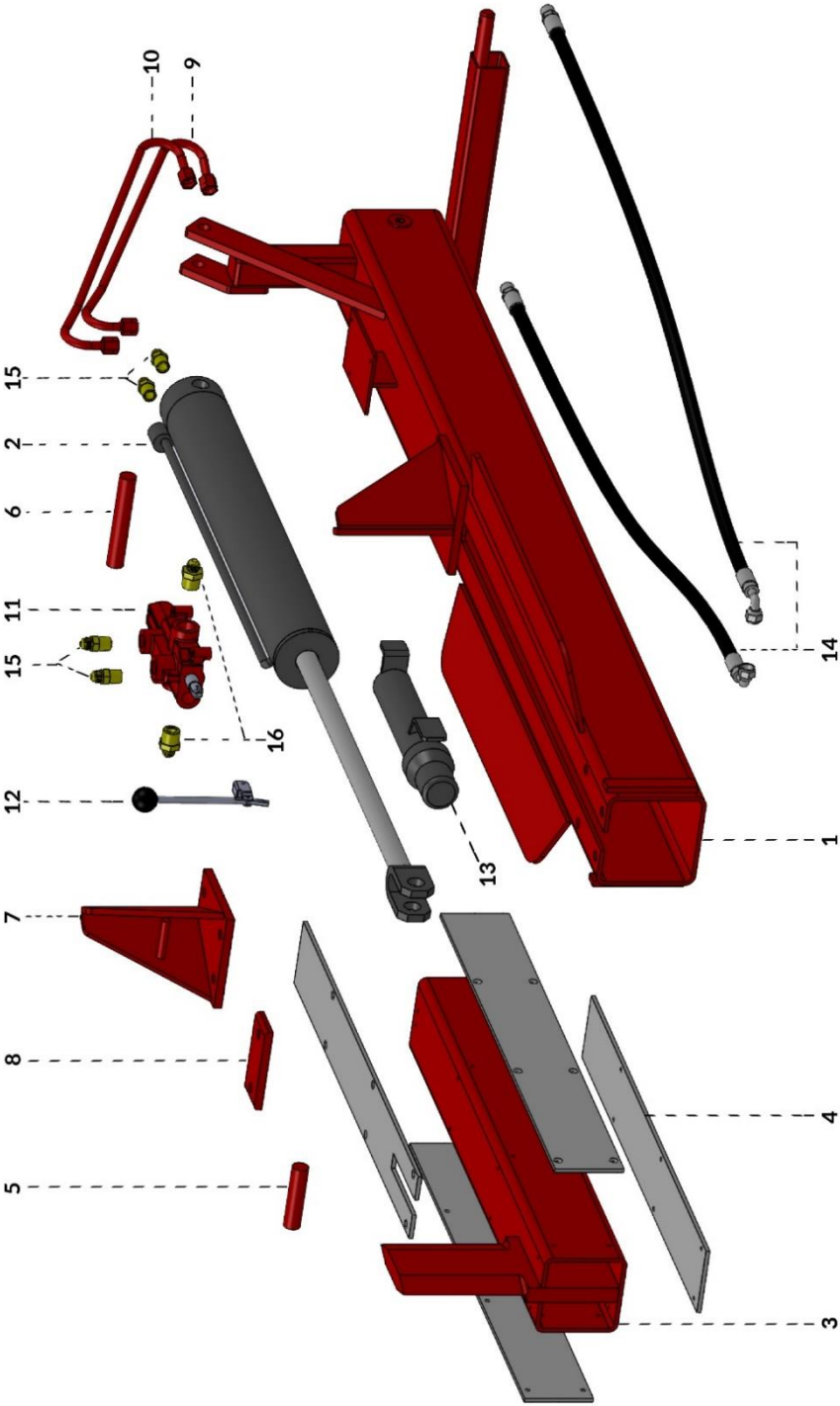

Item	Part Number	Description
1	SLP-2224F3P	Frame Assembly 2203
2	SLC-2024-C	2000 Series 24" Hydraulic Cylinder Assembly
3	SLP-2024-SA	2000 Series 24" Slider Assembly
4	SLP-2024-SPK	2000 Series 24" Slide Pad Kit (4 Pads W/Screws)
5	SLP-SPCF-U2	2000 Series Slider Pin
6	SLP-CPB-U2	2000 Series Cylinder Back Pin
7	SLP-FS-U22	2000 Series Front Stop
8	SLP-FSP-U22	2000 Series Front Stop Plate
9	SLP-12HLS-U23	2000/3000 Series 1/2" Steel Hydraulic Line - Short
10	SLP-12HLL-U23	2000/3000 Series 1/2" Steel Hydraulic Line - Long
11	SLP-PHVA-U	Hydraulic Valve - Complete
12	SLP-PHVH-U	Hydraulic Valve Handle
13	SLP-PMC-U	Manual Canister
14	SLP-HPH-3PU	All Series HP Hose 1/2" JICF x 1/2" NPTM
15	SLP-F1212NJ	Fitting - 1/2" NPT Male x 1/2" JIC Male
16	SLP-F3412NJ	Fitting - 3/4" NPT Male x 1/2" JIC Male

Item	Part Number	Description
1	SLP-3224F3P	Frame Assembly 3203
2	SLC-3024-C	3000 Series 24" Hydraulic Cylinder Assembly
3	SLP-3024-SA	3000 Series 24" Slider Assembly
4	SLP-3024-SPK	3000 Series 24" Slide Pad Kit (4 Pads W/Screws)
5	SLP-SPCF-U3	3000 Series Slider Pin
6	SLP-CPB-U3	3000 Series Cylinder Back Pin
7	SLP-FS-U32	3000 Series Front Stop
8	SLP-FSP-U32	3000 Series Front Stop Plate
9	SLP-12HLS-U23	2000/3000 Series 1/2" Steel Hydraulic Line - Short
10	SLP-12HLL-U23	2000/3000 Series 1/2" Steel Hydraulic Line - Long
11	SLP-PHVA-U	Hydraulic Valve - Complete
12	SLP-PHVH-U	Hydraulic Valve Handle
13	SLP-PMC-U	Manual Canister
14	SLP-HPH-3PU	All Series HP Hose 1/2" JICF x 1/2" NPTM
15	SLP-F1212NJ	Fitting - 1/2" NPT Male x 1/2" JIC Male
16	SLP-F3412NJ	Fitting - 3/4" NPT Male x 1/2" JIC Male

Item	Part Number	Description
1	SLP-4224F3P	Frame Assembly 4203
2	SLC-4024-C	4000 Series 24" Hydraulic Cylinder Assembly
3	SLP-4024-SA	4000 Series 24" Slider Assembly
4	SLP-4024-SPK	4000 Series 24" Slide Pad Kit (4 Pads W/Screws)
5	SLP-SPCF-U4	4000 Series Slider Pin
6	SLP-CPB-U4	4000 Series Cylinder Back Pin
7	SLP-FS-U42	4000 Series Front Stop
8	SLP-FSP-U42	4000 Series Front Stop Plate
9	SLP-12HLS-U4	4000 Series 5/8" Steel Hydraulic Line - Short
10	SLP-12HLL-U4	4000 Series 5/8" Steel Hydraulic Line - Long
11	SLP-PHVA-U	Hydraulic Valve - Complete
12	SLP-PHVH-U	Hydraulic Valve Handle
13	SLP-PMC-U	Manual Canister
14	SLP-HPH-3PU	All Series HP Hose 1/2" JICF x 1/2" NPTM
15	SLP-F1258NJ	Fitting - 1/2" NPT Male x 5/8" JIC Male
16	SLP-F3412NJ	Fitting - 3/4" NPT Male x 1/2" JIC Male

7. Troubleshooting

If you have connected your log splitter to your tractor, have the correct rear hydraulic remotes engaged, and your log splitter is not moving when you move the valve handle, check the following:

1. Ball Couplers – The hydraulic couplers that your tractor uses can wear out over time, or become dirty inside. This may cause them to not flow hydraulic fluid properly. If your couplers are old or dirty, replace them with new couplers, as the log splitter does demand more from a tractors hydraulics than most implements, so good operating clean ball couplers are required.
2. Flow Direction – The valve used on your log splitter requires the hydraulic fluid to flow in the correct direction. If the flow is reversed, the valve will not operate the splitter correctly and may cause damage. If you are unsure of your flow direction, and the unit is unresponsive, disconnect the two hoses and connect them into the opposite ports.

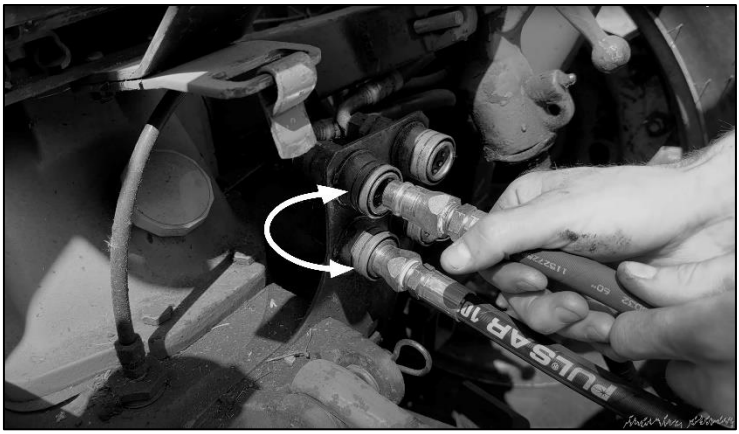

3. Constant Flow – Ensure that your tractor has constant flow to the hydraulic remotes. If you do not, your rear remotes may not be locked on. Consult your tractor's manual, or your dealer to find out how to engage constant flow.

If your tractor's rear remote lever disengages immediately when you engage the handle on your log splitter, or when you start to split a block of wood, your tractor's rear remote valve detent may be set too low. To remedy this please consult your tractor's manual, or dealership and inquire how to increase the detent's set point, or call Split-Fire directly.

If you have just connected your log splitter, ensure you fully retract and extend the cylinder/knife to fill the cylinder with oil. If you do not fully retract the cylinder/knife, shuddering and jumping will occur, this indicates that the log splitter has NOT been fully cycled. The cylinder on your log splitter is shipped with no oil to save from mixing oils in your tractors hydraulic tank. The "shuddering/jumping" is caused by air in the cylinder compressing and releasing. To resolve this, actuate the knife fully to each stop, once this has been done your log splitter will cycle smoothly. If the issue persists, call Split-Fire directly. Be sure to check your tractor's hydraulic fluid level before operating.

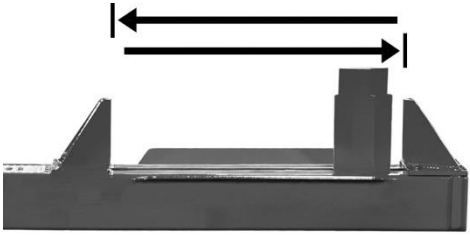

8. Manual Checklist

Each person that operates this Split-fire log splitter must read and understand this checklist and the rest of the owner's manual before operation.

1. Handle wood on the bark side only. Never pick up or handle logs by the sawn ends. Handling logs by the sawn ends may result in injury and/or death.

2. Keep hands at least 6 inches away from the stops and the knife at all times.

3. Always wear ear, eye, hand, and foot protection when operating the log splitter. Never wear loose clothing.

4. Keep the working area around the log splitter organized and free of equipment, tools, wood, and debris. Not doing so could result in injury or death.

5. Do not lift logs that are beyond your lifting capability. To reduce strain and/or injury, lower the log splitter to the ground. Roll the log onto the log splitter using the lower corner of the shelf as a lever.

6. Take frequent breaks when using the log splitter. Stress and fatigue can result in injury and/or death. Be awake and alert at all times.

I have read and fully understand all of the above.
Customer/Operator Signature: _____
Date: _____ / _____ / 20_____